Passenger Lift

Installation Manual

Suzhou Asia Fuji Elevator Co., Ltd

Special Statement

1. **This Installation Manual has been prepared by Suzhou Asia Fuji Elevator Co., Ltd. It applies to the STKJ Series passenger lifts produced by Suzhou Asia Fuji Elevator Co., Ltd.**
2. **Suzhou Asia Fuji Elevator Co., Ltd. reserves the right to retain, modify, and abandon this Passenger Life Installation Manual.**
3. **The copyright of this Passenger Life Installation Manual belongs to Suzhou Asia Fuji Elevator Co., Ltd. Suzhou Asia Fuji Elevator Co., Ltd. reserves the right to investigate the legal liabilities of any entity or individual for replicating, copying, or excerpting contents of this manual.**

Contents

1. Preparation for installation

1.1 Manpower organization

The elevator installation team usually has 3 or 4 members. Technical works participating in the installation must have taken the training of safe practice for special operations, passed the corresponding examinations, and obtained the “Certificate of Qualification for Special Operations” for the installation and maintenance of elevators. The team must include one installation mechanic and one electrician who are familiar with elevator products and responsible for installation and adjustment of the elevator. In addition, the person in charge of the installation site shall consult with the user on a certain number of cranemen, scaffolders, carpenters, masons, and assistant works as needed by the working procedures, in order to ensure the smooth progress of installation. Parallel working may be used for the mechanical and electrical installation. The leader of the installation team shall make an operation plan for unified arrangements.

1.2 Getting familiar with drawings and data

1.2.1 Construction layout drawing of the building, structural diagram of the elevator hoistway, layout drawing of the elevator hoistway, drawings of related embedded parts and preformed holes, and layout plan of the machine room.

1.2.2 Installation manual, general structural diagram of the elevator, mechanical installation drawings, packing list, electrical installation and wiring diagrams, electrical schematic diagrams, commissioning, operating, and maintenance guides, etc.

1.2.3 Installation and acceptance data of the elevator, relevant standards, and relevant process specifications.

1.3 Measurement of hoistway and machine room

1.3.1 Use the construction layout drawing of the elevator to recheck the net planar dimensions (width and depth) in the hoistway, the verticality of the hoistway, preformed holes of the hoistway, positions of embedded iron parts, positions of the hoistway ring beams, pit depth, overhead height, dimensions of the corbel sill of each landing, and lifting height.

1.3.2 Use the construction layout drawing of the elevator to check the plane layout of the machine room, the clearance dimensions (width, depth, and height) of the machine room, the positions and sizes of preformed holes in the floor, and the height and position of lifting hooks.

In the event of any disagreement with the construction layout drawing, immediately advise the user to make corrections in time. The horizontal dimensions of the elevator

hoistway as defined in Clause 7.1 of GB/T 7025.1-1997 are the minimum clearance dimensions measured with a plumb. The permissible deviation is:

0~＋25mm when height ≤30m

0~＋35mm when height ≤60m

0~＋50mm when height ≤90m

General Structural Diagram of the Elevator

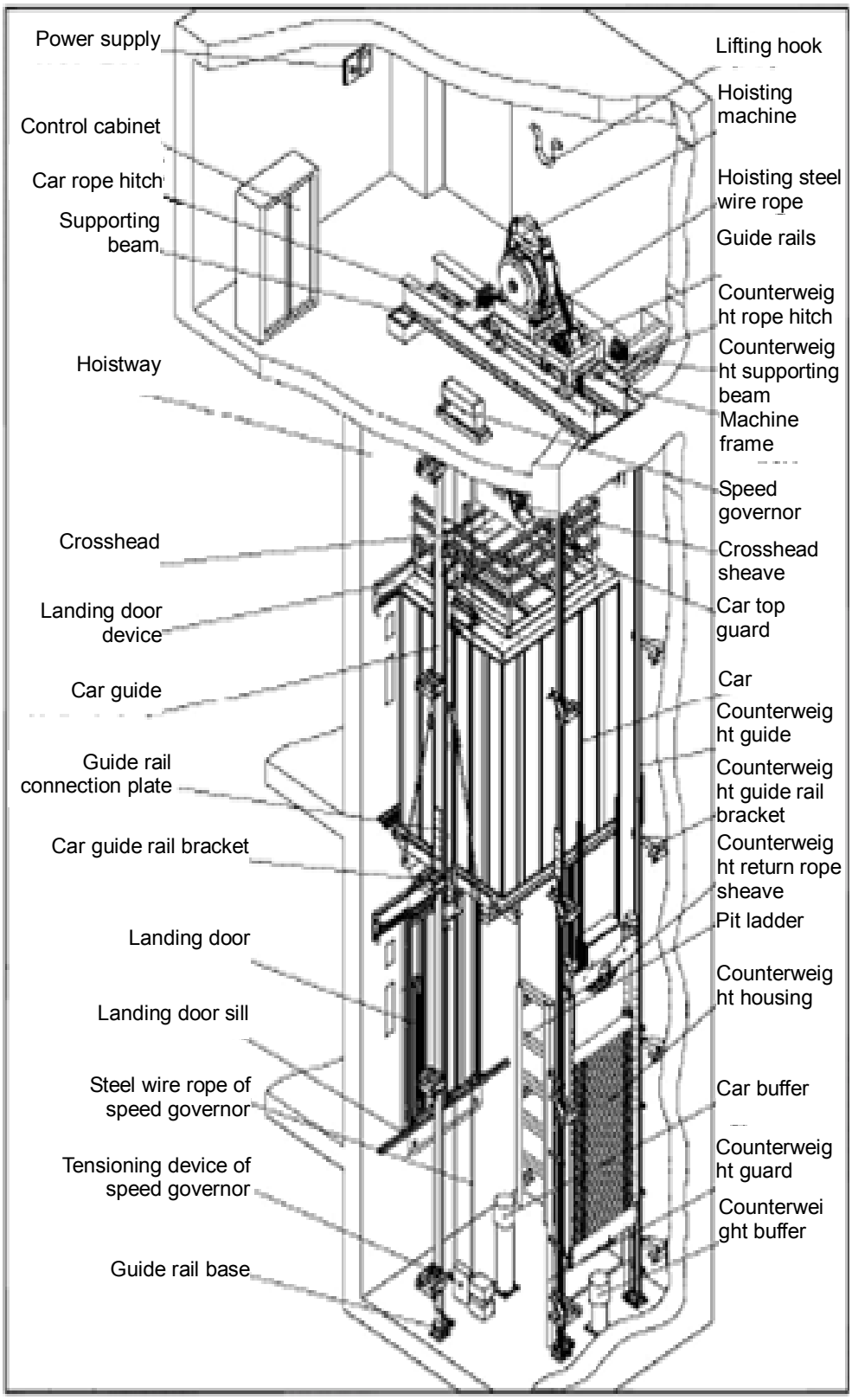

1.4 Unpacking and counting the components and auxiliary materials

1.4.1 Select an appropriate stacking location. Articles that are susceptible to damp shall be put in well-ventilated places. The warehouse shall be dry, illuminated, and lockable.

1.4.2 Work with the user or its competent authorities to open the package and take out the packing list and technical documents of the elevator. Check and count the components and auxiliary materials according to the documents and immediately keep the record. After counting is completed, both parties shall sign and archive the record. If any missing or incorrect item is found during the counting process, the information shall be promptly fed back as required by the Contract and relevant regulations in order that the problem can be verified and solved.

1.4.3 Transporting and stacking the equipment

a. Carry the hoisting machine unit, speed governor, control cabinet, machine supporting beam, and bed frame (base plate) of the hoisting machine to the machine room or the top floor.
b. Carry the component parts of the car frame and the car to the top floor.
c. Carry the guide rails, guide rail base plate, counterweight guard, ladder, counterweight assembly, counterweight, buffer, and tensioning sheave to the bottom floor.
d. Carry the landing doors, door jambs, and sills to the corresponding floors or intermediate rooms according to the on-site condition.
e. Easily deformable and pliable components, such as guide rails, landing door guide, door leaves, and door jambs, shall be laid flat and properly cushioned. Electrical and vulnerable components shall be properly stored and managed in accordance with their technical specifications.

1.4.4 Inspection and reconditioning of guide rails

The car guide and counterweight guide used for the elevator must have been measured by the quality inspection authorities with special-purpose instruments. Their straightness, symmetry, and thickness shall meet relevant requirements, because they have a direct influence on the installation accuracy and comfort of the elevator guide. This is a critical step in the installation of the entire elevator.

a. Carefully check the joints of the main guide and the counterweight guide. If there is any burr or dirt, trim the guide with a file and then clean it up.
b. If the terrace of the guide joints is greater than 0.05mm, adjust the sequence of the

guide rails until the deviation between joints is minimized.

c. Clean the accepted main guide and counterweight guide and array the rails according to the mortise-tenon order. After arraying the rails, number the corresponding joints with paint.

d. After reconditioning and arraying all guide rails, lay them flat in a clean place and properly cushion them. Prevent guide rails from colliding with any other object. Cover them with tarpaulin to keep out mud, sand and any other type of extraneous matter.

1.5 Safe use of electric power in construction

1.5.1 Check if the power supply for the elevator is temporary power supply. If yes, as the purchaser to timely replace it with permanent power supply.

1.5.2 A special-purpose switchbox and corresponding warning signs must be provided for construction power. All loads must be equipped with short-circuit protection and overload protection. Power for manual tools must be controlled through matching leakage protectors.

1.5.3 The power supply for the machine room must be controlled through a readily accessible switch so that the switch can be promptly turned off in an emergency. The fuse shall be a former one and shall not be replaced with a copper wire.

1.5.4 Shielded 36V jacklights and qualified power sources shall be used on the installation site.

1.5.5 The machine room must be well illuminated. The elevator lighting shall be independently powered.

1.5.6 The power supply for the electric welding machine shall be controlled through an independent switch.

1.6 Tools for elevator installation (See table below)

No.	Name & spec.	No.	Name & spec.	No.	Name & spec.
1	Socket spanner	19	Portable work light	37	Puller
2	Monkey spanners: 10 " , 20 "	20	Hacksaw frame	38	A pair of intercoms
3	Pliers	21	Cross screwdrivers: 3 " , 4 "	39	Angular finishing grinder
4	Wire stripper	22	Files: plate, circular, semi-circular, triangular	40	Electric hammer

No.	Name & spec.	No.	Name & spec.	No.	Name & spec.
5	Screwdrivers: 1 " , 2 " , 6 " , 12 "	23	Drills: 2.8, 4, 5, 6, 8, 10, 12, 16, 18	41	Snap gauge: 33L52-1, 33L52-2, 33L52-3
6	Plumb bob: 10～15kg	24	Ball pein hammers: 3/2lbs, 4lbs	42	Holing knife
7	Wire cutter	25	Wood hammer	43	Hand shears
8	Angle rulers: 4 " , 12 "	26	Electric drills: 6mm, 19mm	44	Gas welding equipment and tools
9	Feeler gauge	27	Electric soldering iron: 35W, 150W	45	Power transformer: 36V/150VA
10	Steel measure tape: 3m	28	Electrician's knife	46	Power socket
11	Steel rulers: 300mm, 1,000mm	29	Flashlight	47	Box wrench
12	Hydraulic jack (5T)	30	Screw dies: M8, M10, M12, M16	48	Vernier caliper
13	Chain block (3T)	31	Screw die rack	49	Magnetic plumb
14	Multimeter	32	Oil gun	50	Small electric welding machine
15	Megameter	33	Marking gauge	51	Flat chisel
16	Tachometer	34	Test pencil		
17	Clip-on ammeter	35	Hexagon socket wrench: 1.5mm, 2.5mm		
18	Decibel meter	36	Leveling rod		

1.7 Elevator installation schedule

The working procedures of elevator installation can be arranged according to "Elevator Installation Schedule".

Elevator installation schedule

No.	Item	Effective work days																									
		1	2	3	4	5	6	7	8	9	10	11	12	13	14	15	16	17	18	19	20	21	22	23	24	25	26
1	Preparation for installation																										
2	Erecting templets																										
3	Installation of guide rails																										
4	Installation of landing doors																										
5	Installation of supporting beams																										
6	Installation of hoisting machine																										
7	Installation of guide ways																										
8	Installation of buffer																										
9	Installation of car frame																										
10	Installation of counterweight																										
11	Installation of hoisting ropes																										
12	Installation of car																										
13	Installation of car door																										
14	Installation of safety edges																										
15	Installation of door operator																										
16	Installation of speed governor																										
17	Installation of control cabinet																										
18	Installation of cable system																										
19	Installation of signal system																										
20	Wiring and earthing																										
21	Commissioning																										

Notes: 1. Work days are calculated according to a single 10-landing, centrally controlled variable-speed elevator 2. The arrangement of working procedure may be adjusted according to the specific condition or parallel operation

1.8 Work safety rules for installation personnel

1.8.1 Be sure to remember the “Safety First” production orientation and keep mentally alert.

1.8.2 Be sure to put on safety helmets, safety gloves, and work shoes before entering the construction site. It is strictly forbidden to frolic during construction. It is strictly forbidden to perform construction operations after drinking alcohol.

1.8.3 Before construction, carefully check the equipment and tools to be used. The flammable and explosive articles to be used in construction shall be kept in safe places and managed by specially-assigned persons in order to ensure absolute safety during construction.

1.8.4 Be sure to stand firmly and hold tight to the scaffolds while climbing up and down the hoistway scaffolds during an operation. A steel pipe paved with two layers of scaffold plates shall be set up in each scaffold layer. Unless other protective measures have been taken, safety belts must be put on and firmly tied to secure objects if the operating height is greater than 2m and the operation involves the risk of falling. While dismantling scaffolds, be sure to remove or bend the nails in the wood boards.

1.8.5 Before the landing doors are installed, be sure to set up protective doors or guard rails at the landing door openings and entrances to the hoistway. The height of any protective door (or guard rail) shall be not less than 1m. The bottom of the guard rail shall be fixed with about 150mm skirtboards. And easily visible warning signs shall be hung lest personnel enter the hoistway by accident or extraneous objects fall into the hoistway and cause injuries.

1.8.6 The operation area and surrounding areas must be kept clean. Stumbling and other injuries must always be prevented in order to maintain a safe environment. Do not stack rollable and slippery components, tools, and installation materials on scaffolds. Do not work on two neighboring layers in the hoistway. It is strictly forbidden to climb or slide down cables, electric wires, guide rails, or compensation chains. If there are preformed holes in the machine room, the preformed holes shall be fixed with wood boards or covered with heavy objects to prevent objects from falling into the hoistway.

1.8.7 Construction personnel are strictly forbidden to lean from outside the hoistway into the car or work between the landing door and the car door. It is strictly forbidden to short-circuit the door interlock or any other safety circuit.

1.8.8 Operations on live equipment shall be handled by at least three persons and insulated tools shall be used. It is strictly forbidden to assign any operation to a single

person.

1.8.9 While installing or repairing electrical equipment, make sure its power switch has been turned off and hang “Do NOT Switch on” and “Under Construction” signs.

1.8.10 Sufficient lighting must be provided whenever an operation is in progress in the hoistway. Portable work lights shall be provided with rubber handles and protective shields and be powered with safety voltages not higher than 36V.

1.8.11 Weight-bearing lifting hooks in the machine room shall be accompanied by Guarantee of Bearing Capacity provided by the user. Before lifting any heavy object, perform a strict inspection of the rigging and the hoist. Sufficiently allow for the weight of the object to be lifted and select appropriate lifting tools and equipment.

1.8.12 Whenever soldering, cutting, or brazing torches are used during installation, relevant operating rules must be strictly followed in order to prevent fire accidents.

1.8.13 Before manually driving the hoisting machine in the machine room to move the car, be sure to switch off the power supply.

1.8.14 Before entering the car top or bottom pit for any operation, be sure to switch off the non-automatic reset button switch.

1.8.15 Unauthorized personnel shall not start the elevator before it passes the acceptance inspection by the quality inspection authorities.

1.9 Clearing the construction site

Before elevator installation, clean and trim the machine room, hoistway, bottom pit, and all other construction spots. After the elevator installation and before the overall commissioning, clear the extraneous matter at the door openings of all landings, in the machine room and the bottom pit, and on the car top. Collect and properly store the remaining oddments.

2. Installation processes and quality requirements

2.1 Scaffolding

Scaffolding is a required item of preparation for elevator installation. The quality of scaffolding has a major influence on the safety of the installation personnel and the progress of elevator installation. Scaffolds shall be erected by scaffolders holding “Qualification Certificate for Special Operations”. The elevator installation and repairing workers shall advance scaffolding requirements before the scaffolds are erected. After scaffolds are completely erected, strictly check if the erected scaffolds meet safety

requirements. Unacceptable scaffolds shall be re-erected until they meet safety requirements. Materials suitable for scaffolding include spruce and steel tubes. They shall be selected according to the specific situation. Whichever material is chosen must ensure the stability (each layer must have at least one cross-bar butted against the wall) of the scaffolds and sufficient bearing capacity.

2.1.1 Clearing the hoistway

Before erecting scaffolds, clear the hoistway pit of extraneous matter and any obstacles on the hoistway walls that may hinder installation.

2.1.2 Erecting scaffolds

a. Scaffolds shall be erected in grids, as shown in Fig.1.
b. The spacing between cross-beams on the scaffolds is preferably 1.2m. Scaffolds at the hall doors of the hoistway shall be erected in the pattern shown in Fig.2.
c. Scaffold cross-beams on each floor shall be completely paved with wood boards. Any clearance shall be not greater than 50mm. Both ends of any wood board shall be temporarily fastened to the cross-beam. The separating wood boards between layers shall be staggered by 90°. It shall usually extend out of both sides of the cross-bar by 100mm. The extension shall be neither too long nor too short. The clearance between boards shall be such that personnel do not step into it and large tools do not fall into it. Both ends of each wood board shall be firmly bound with #10 galvanized iron wires lest they warp and cause accidents in order to ensure the safety of the construction personnel.

2.1.3 Notes

a. The erection of scaffolds shall not interfere with the installation positions of and access to the guide rails and guide rail supports. Set lines and access to other parts shall be circumvented.
b. Erected scaffolds shall be easy for installation personnel to climb.
c. When scaffolding reaches the top landing, short columns shall be used instead in order to facilitate the future dismantlement during the assembly of the car.
d. The bearing pressure of the scaffolds shall be greater than 250kg/m^2.

After scaffolds are erected, the installation personnel shall carefully check if the scaffolds are safe and compliant with service requirements and check if there is residual extraneous matter that crops out of the wall surfaces below the machine room floor and in the hoistway. Any extraneous matter found shall be eliminated.

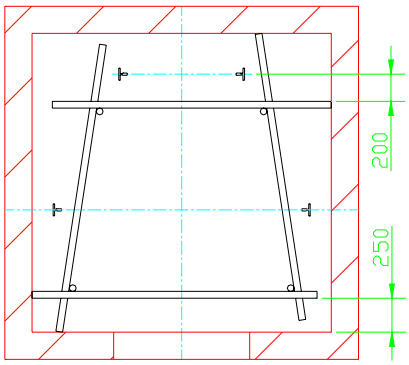

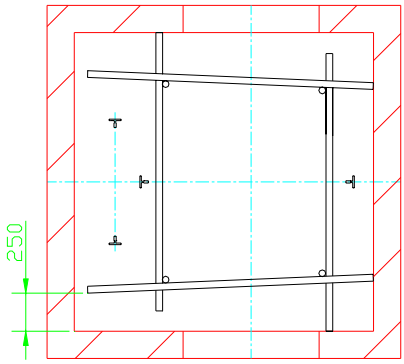

Figure 1(a) Post-posed counterweight **Figure 1(b) Lateral-posed counterweight**

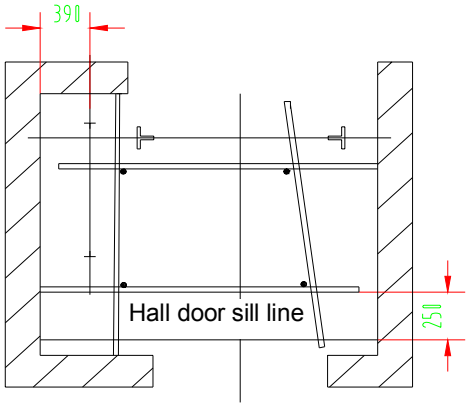

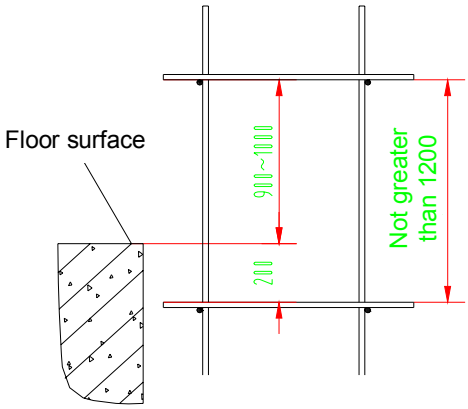

Figure 1(c) Type of panoramic elevator **Figure 2**

2.2 Fabricating template holders

2.2.1 Materials used for fabricating template holders include wood and profiled steel. Profiled steel is usually used for high-rise elevators. Wood is the most frequently used material for the time being. Wood used for the fabrication of template holders shall comply with relevant standards. All four sides of any wood block shall be planed and meet the following requirements:

Lifting height (M)	Thickness (mm)	Width (mm)
≤20	30	80
＞20～40	40	100
＞40	50	100

2.2.2 Template holders are divided into upper template holders and lower template holders. The upper template holders are of a framework type according to the type of elevator guide rails. Mark the center line of the car guide, center line of the counterweight guide, and center line of the car on the fabricated template holder. The positional deviation of any line shall be not greater than 0.3mm. Then mark 10 plumb lines according to Fig.3. ①② are net door-opening lines of the car sill. ③④⑤⑥ are car guide bracket surface lines. ⑦⑧⑨⑩ are counterweight guide bracket surface lines. If it is an opposite door elevator, car sill net door-opening lines 11 and 12 shall be set. If there is no machine room or there is only a small machine room, traction sheave center lines 13 and 14 shall be set. A is the car width; B is the car depth; C is the door-opening width of the car; D is the distance from the car center to the counterweight center; E is the pitch of the traction sheave. L_1 and L_2 are respectively the distances between the car guide bracket surface and the counterweight guide bracket surface. The specific dimensions are shown in the construction layout drawing of the elevator.

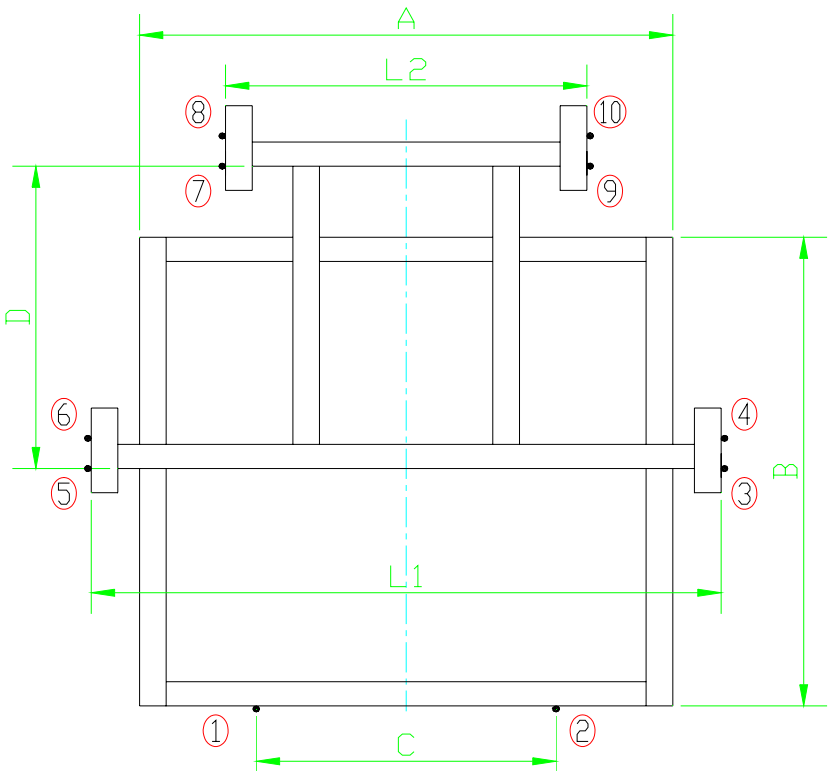

Figure 3(a) Post-posed counterweight

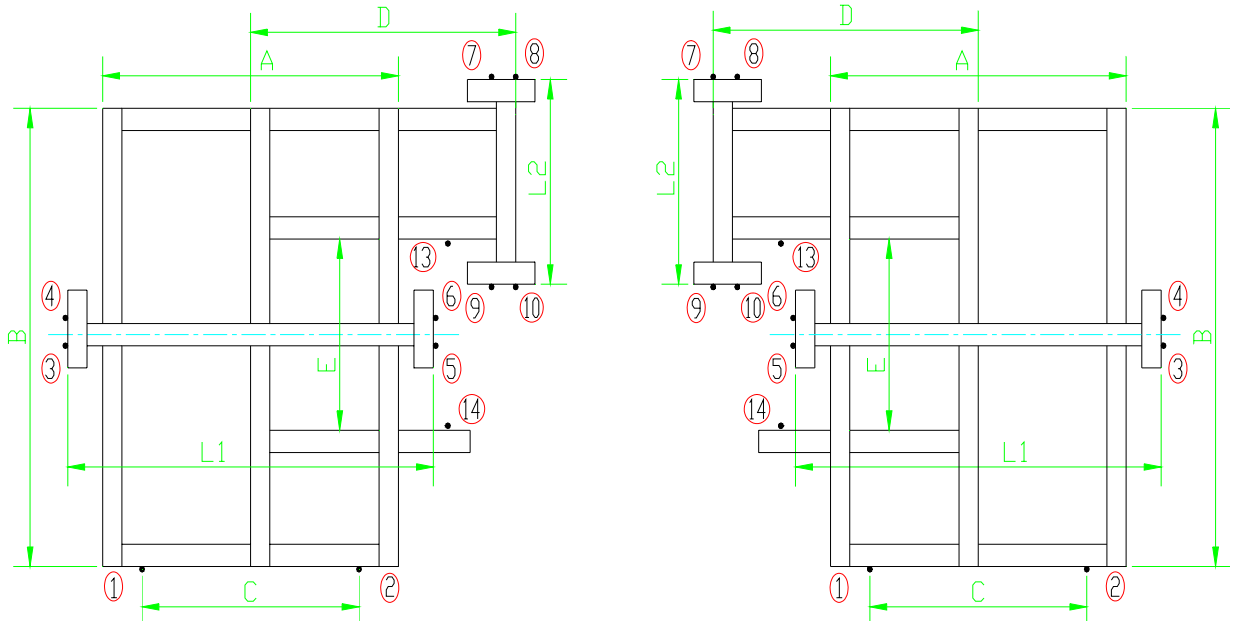

Figure 3(b) Lateral-posed counterweight

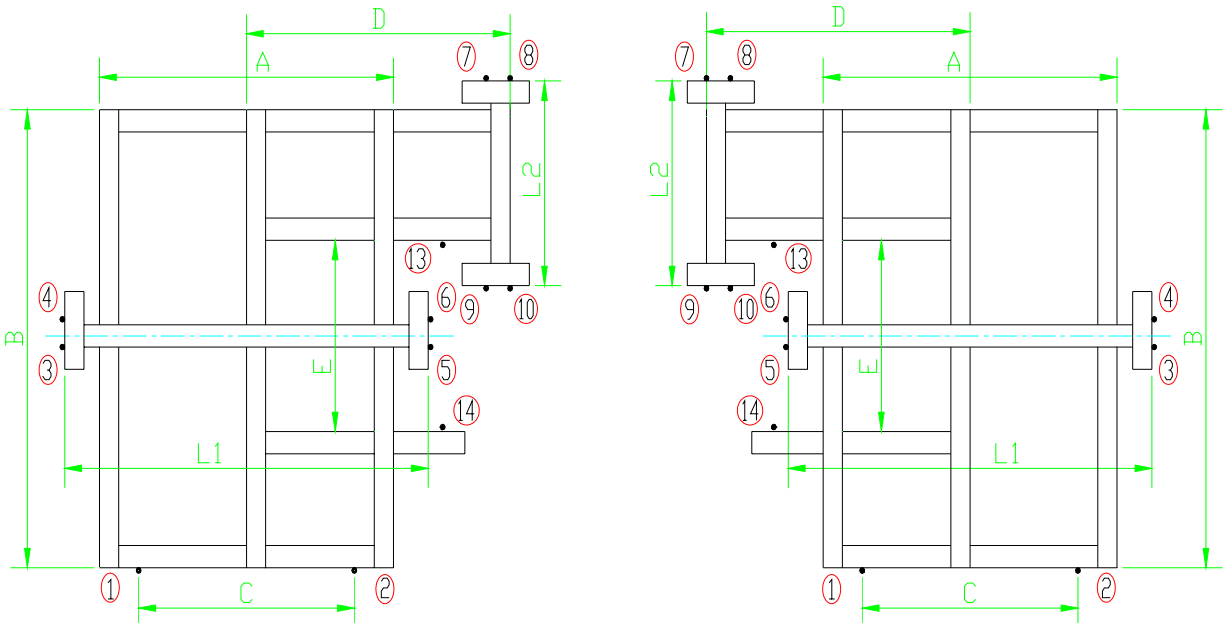

Figure 3(c) Type of elevator without machine room

The reference lines of the car and counterweight guide rails shall be set by translating the guide bracket surface lines after the guide brackets are installed, commissioned and fixed.

2.2.3 Fabrication of the lower template holders is not subject to strict requirements and may be determined by the installation personnel.

2.3 Erecting template holders

2.3.1 Template holders are usually fixed in the hoistway 500mm below the floor of the machine room. If there is no machine room or there is only a small machine room, the template holders are fixed in the hoistway 250mm below the top plate of the hoistway. Four 150×150mm holes 200m in depth are drilled in the hoistway at this level and two 100×100mm wood beams with planed four sides are inserted into these four holes. After the calibrated levelness is not greater than 5mm, these wood beams will be fastened.

2.3.2 Place the template holder onto the wood beams and then check if the levelness of the template holder is within 5mm. After calibration, determine the horizontal position of the template holder according to the actual dimensions in the hoistway and the positions of the preformed holes in the machine room. Then preliminarily fix the template holder onto the wood beams (See Fig.4).

2.3.3 Where there is an inclination or great lifting height in the elevator hoistway, a lower template holder shall be made. The lower template holder has basically the same form as that of the upper template holder and is installed at a distance of 0.8m~1m to the bottom of the pit. Its fixing mode is quite simple. As shown in Fig.4, it can be fixed and installed by using coupling planks to combine it with wood columns.

2.3.4 According to the marked positions for hanging plumb lines on the upper template holder, fix one end of a φ0.7~φ0.9 steel wire to the iron nail in the corresponding position on the upper template holder (the fixing point shall be safe and reliable) and hang a heavy object at the other end. Slowly lower the object until it reaches the bottom pit. The intermediate plumb line shall not contact the scaffolds or any other object or run through the scaffolds. No fast knots are allowed along the steel wire. Carefully check the template holders so that it is placed in the most convenient position for operation. Then formally nail the upper and lower template holders to the supporting wood beams.

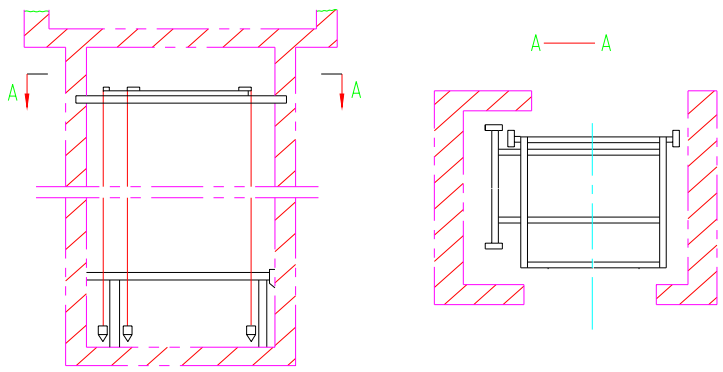

Figure 4

2.3.5 After the template holders are properly installed, securely fix the lower ends of all plumb lines.

2.4 Installation of rail supports

2.4.1 Check the ring beams or embedded steel plates of the hoistway

Check the positions and exterior dimensions of the ring beams of the hoistway and embedded steel plates of the brackets according to the Vertical Elevator Hoistway Drawing.

2.4.2 Principles for arrangement of rail supports:

a. Each guide rail has at least 2 rail supports and the spacing shall be not greater than 2.5m.

b. The spacing between rail supports is usually set at 2m. The distance between the lowest rail supports and the hoistway pit shall be not greater than 0.6m. The distance between the highest rail supports and the hoistway top shall be not greater than 0.3m.

c. The arrangement of rail supports shall be such that they do not interfere with the rail connecting plates.

d. If the elevator has no machine room or has a small machine room, a bracket shall be placed beneath the base of the hoisting machine. This bracket shall be such that it can be welded onto the bracket of the hoisting machine base and the hoisting machine base plate in the future.

2.4.3 Installation of rail supports:

a. Draw a thin line on the symmetric center line of the round screw holes for installing guide rail clips on the car-counterweight connecting beam. Then drill three punching holes in its top, middle, and bottom parts to make marks (See diagram below).

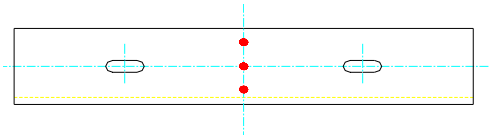

Figure 5

b. Assemble the left and right arms of the rail supports and the connecting beam of the rail supports with hexagonal bolts according to Fig.6. Then align the marked lines on the rail support connecting beam to the central plumb line suspending from the template holder. Use the plumb line as the reference to determine the

position and levelness of each rail support. Make sure that a 1~3mm clearance shall be maintained between the bracket connecting beam and the plumb line (See Fig.6).

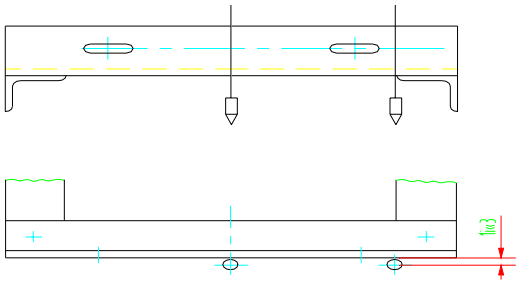

Figure 6

c. Fix the left and right arms of the bracket onto the hoistway walls (Fig.7) according to the condition of the hoistway. Use a level gauge to check the levelness of the rail support and make sure the levelness along the whole length is not greater than 0.5%.

(1) If there are embedded plates in the hoistway, weld the bracket to the embedded plates. The welds shall be continuous and both sides shall be securely welded.

(2) If the hoistway has a brick structure and no embedded plates, embed the left and right bracket arms into the hoistway. Before using 1:2:3 concrete to grout the embedding holes of the rail support, first use water to flush the extraneous matter buried in the holes. High-quality cement above Grade 400 shall be used for the concrete. After grouting, shade-dry the concrete for 3~4 days. Do not proceed to the next step until the bracket cement is solidified and the surfaces of the bracket are polished. Note: the burial depth of the car brackets shall be greater than 120mm and the burial depth of the counterweight rail supports shall be greater than 150mm.

(3) If the hoistway walls are made of concrete or have ring beams, use expansion bolts for fixation. Use a percussion drill to drill holes that match the specifications of the expansion bolts in the wall. Put the expansion bolts in the holes, and then use the bolts to fix the bracket.

(4) If the hoistway walls are made of bricks without embedded plates and the wall thickness is less than 120mm, through-wall screws shall be used for fixation. Use M12 or larger bolts and at least 8mm thick steel plates to fix the bracket to the hoistway walls.

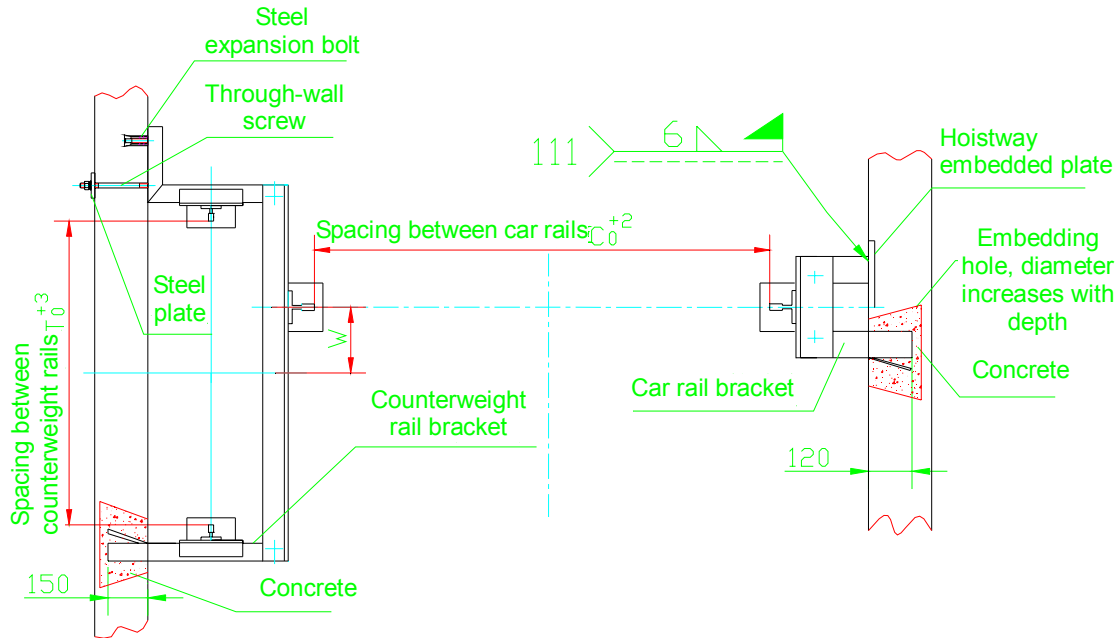

Figure 7

2.5 Installation of guide rail base

2.5.1 Position the bottom plates of the car and counterweight rails according to Fig.8 and adjust their levelness.

2.5.2 After calibrating the car and counterweight rails and installing the buffer, securely weld the connecting steel angle bars according to the drawing (Fig.8).

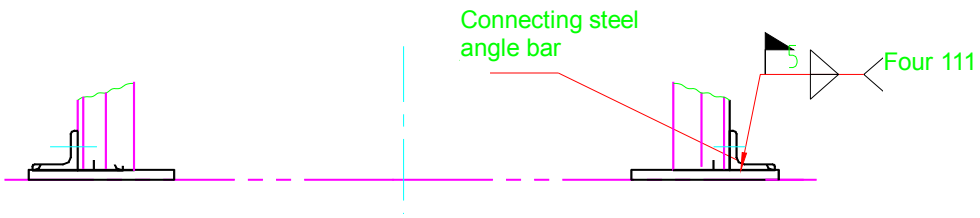

Figure 8

2.6 Installation of guide rails

2.6.1 Use the plumb lines to remove one out of every two installation rail supports. Move the rest one to the center line of the guide rail at a distance of about 10mm to the top surface of the guide rail as the reference line for installing guide rails. Then steadily fix the upper and lower ends of the plumb line respectively to the upper and lower template holders of the hoistway.

2.6.2 Clean the working surfaces of each guide rail, both tenons, and the connecting plate on the ground and then perform connection. Then use bolts to securely connect the guide rails and rail connecting plates.

2.6.3 Securely hang a fixed pulley below the floor of the machine room.

2.6.4 Use the pulley to erect the bottommost guide rail and support its lower end on the guide rail bottom plate. For the rest of them, refer to Fig.9 to install the guide rail locking shims, use pressure plates and bolts to prestress them on the rail supports, and then erect them one by one from bottom to top. Use connecting plates to connect rails and then use the same method to prestress them on the rail supports.

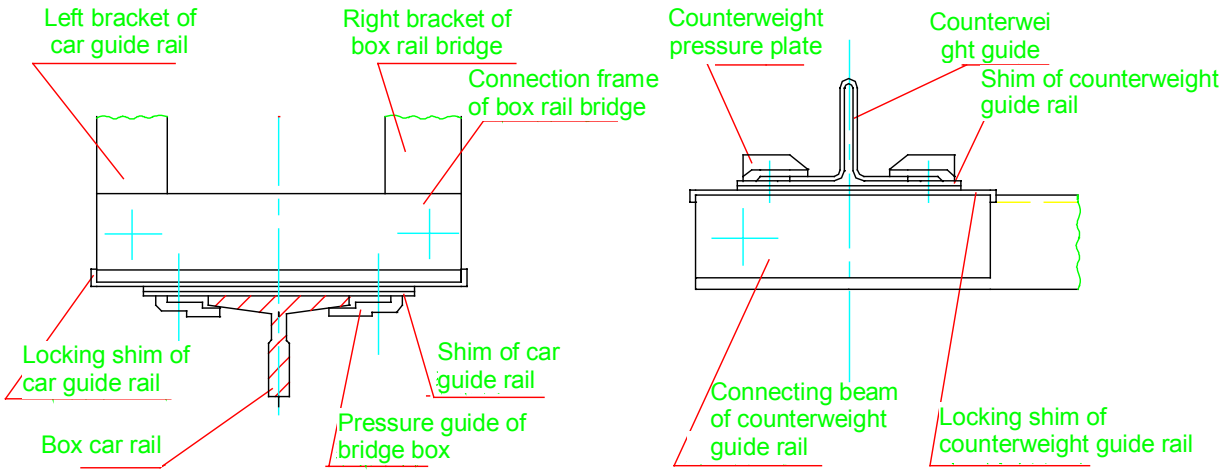

Figure 9

2.6.7 Technical requirements on guide rail installation

a. Each guide rail shall have at least 2 rail supports.

b. The top of each row of guide rails shall be 50~100mm away from the top of the hoistway floor (the row of counterweight rails beneath the hoisting machine base of an elevator with no machine room or small machine room shall be fitted to the lower end of the base plate of the hoisting machine, so that it can be welded to the base after the hoisting machine is installed).

2.7 Correction of guide rails

2.7.1 Use special-purpose rail correction gauges to perform initial correction of the car guide rails and counterweight guide rails along the plumb lines from bottom to top, as shown in Fig.10. Increase or decrease the number of car and counterweight rail shims when necessary.

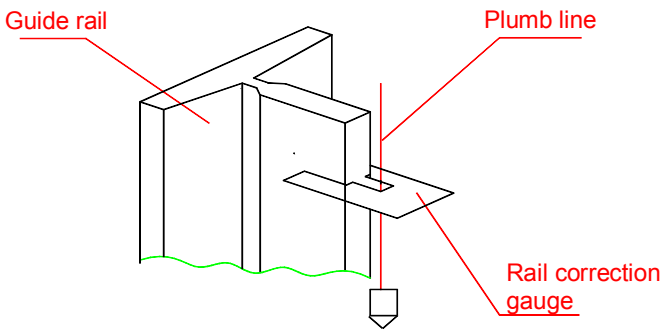

Figure 10

2.7.2 Hang plumb lines according to the center marks of the car and counterweight on the template holders.

2.7.3 Using the center plumb lines hung from the template holders, gradually correct the spacing and deviation between both guide rails from bottom to top with the fine rail correction gauge, as shown in Fig.11. If the rail spacing is found to be inappropriate, adjust the rails by increasing or decreasing the number of shims. After adjustment is completed, fasten all rail pressure plates.

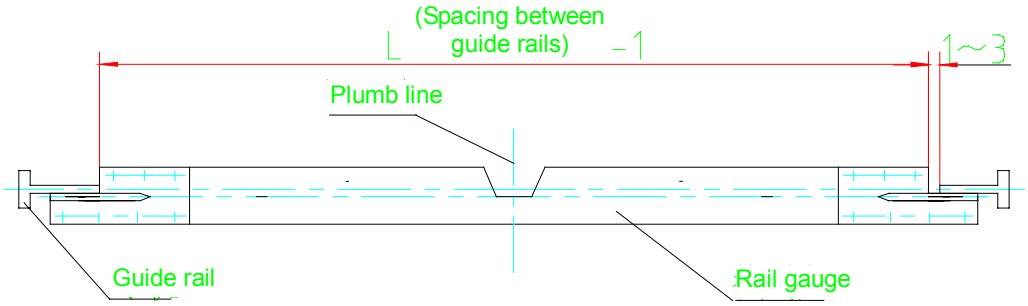

Figure 11

2.7.4 Technical requirements on guide rail installation:

a. The deviation per 5m between the working surfaces (lateral surface and top surface) of each row of rails and the installation reference lines (plumb lines) shall be not greater than 0.6mm for car rails and not greater than 1.0mm for counterweight rails.

b. The mutual deviation of each row of guide rails shall be not greater than 1.omm for car rails and not greater than 1.5mm for counterweight rails.

c. Joints between car guide rails shall be free of continuous gaps and local gaps shall be not larger than 0.5mm. Measured with 0.01/300 flat rulers or other tools, the terraces at guide rail joints shall be not larger than 0.05mm. The excessive parts shall be leveled with a sleeking length greater than 150mm. Gaps at counterweight

guide rail joints shall be not larger than 1.0mm. Terraces at the joints of guide rail working surfaces shall be larger than 0.15mm and the excessive parts shall also be leveled.

d. Spacing deviation between top surfaces of two rows of guide rails:

Car guide rails: Spacing between car guide rails^{+2},

Counterweight guide rails: Spacing between counterweight rails^{+3}

2.8 Installation of landing doors

2.8.1 Installation of landing sills

2.8.1.1 Two net door-opening lines for the car door sill have been set from the template. Draw the door center line and net door-opening line on the landing sill according to the net door-opening width of the landing door.

2.8.1.2 Before installing the landing sills, negotiate with the civil construction specialty to determine the elevation lines of each landing sill. The upper surface of the fixed sill shall be 5~10mm higher than the final floor surface and a 1/100~1/150 slope shall be made between the sill and the floor surface to prevent fluids from flowing into the hoistway. It is very important to coordinate the sills with the future floor decoration, especially for the installation of landing sills of multiple elevators paralleled. Before installation, the car guide rails have gone through fine correction and alignment. Therefore, a pair of tooling brackets for installing landing sills may be fabricated on the car guide rails (See Fig.12). And the two net door-opening lines of the car door sill shall be used as the reference. This method can ensure the accuracy of landing sill installation.

2.8.1.3 Assemble the landing sill and the sill fascia.

2.8.1.4 Install the tooling brackets on the car guide according to the determined landing sill elevation line. Make sure the left and right tooling brackets are on the same level. After they pass the measuring inspection, tighten up the fastening bolts.

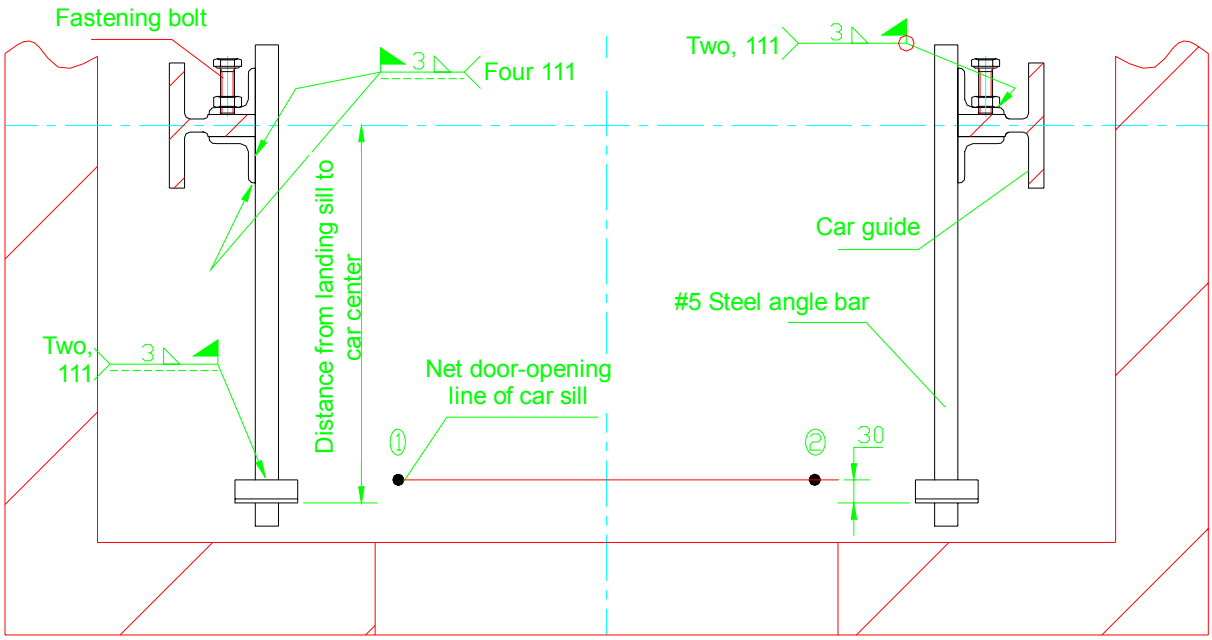

Figure 12

2.8.1.5 Place the assembled landing sill and sill fascia onto the already leveled left and right tooling brackets. Then install the supporting bent plate (Fig.13). The installation of the sill shall meet the following requirements:

a. The marks on the sill seat shall be aligned to the plumb line. The maximum deviation shall be not greater than 2mm.

b. The upper surface of the sill shall be 2~5mm higher than the finished floor surface.

c. The levelness of the upper surface of the sill shall be not greater than 2/1000.

d. The distance from the frontal edge of each landing sill to the plumb line shall be not greater than 1mm.

e. After all above requirements are met, securely weld the sill seat to the supporting bent plate.

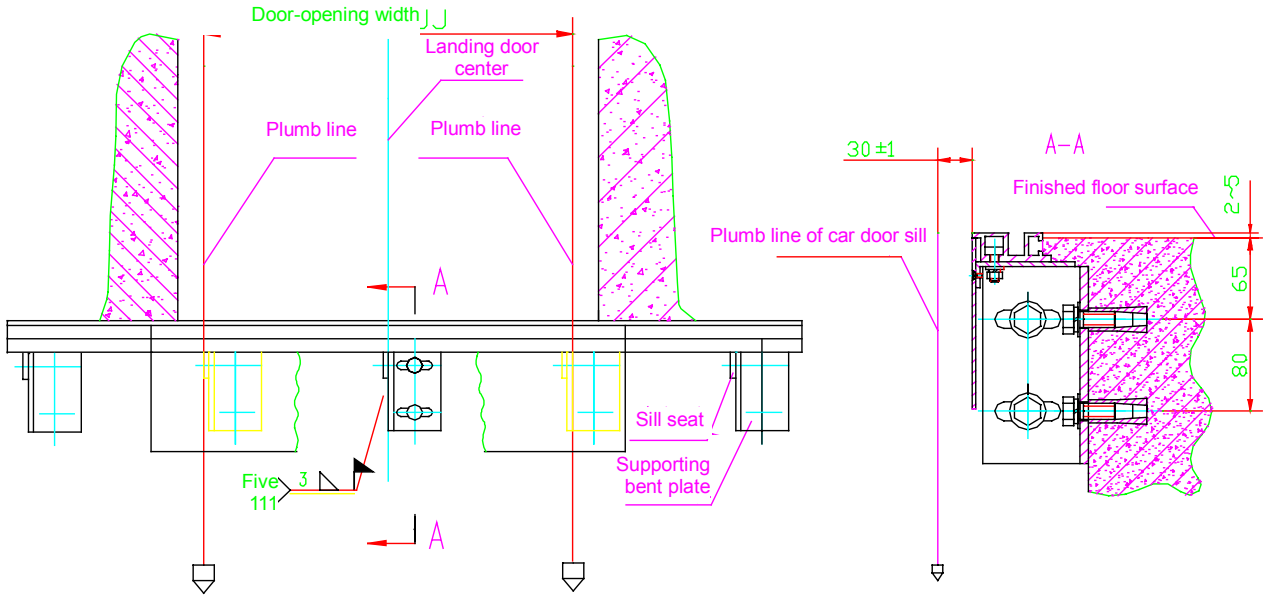

Figure 13

2.8.2 Installation of upper landing sill bracket

2.8.2.1 Lean the upper landing sill installation assembly against the wall. Determine the positions of the expansion bolts and then drive the expansion bolts into the wall (Fig.14).

2.8.2.2 Fix the upper sill bracket onto the wall according to the following requirements:

a. The levelness of the door guide rails shall be not greater than 1/1000.

b. The verticality of the door guide rails shall be not greater than 0.5mm (Fig.15).

c. The distance from the front end of the upper sill bracket to the front end of the car sill shall be 37±1mm.

d. The deviations between the door guide and the sill slot at both ends and three points in the middle shall be not greater than 1mm (Fig.15).

2.8.3 Installation of jambs (Fig.13 and Fig.14)

Assemble the vertical jambs with the horizontal jamb and the fix the horizontal jamb to the cross beam of the door guide and both vertical jambs to the landing sill with bolts. Make sure that the verticality of both vertical jambs is not greater than 1/1000. Drive expansion bolts into the walls beside the jambs and finally use electric welding to fix the expansion bolts to the vertical jambs.

2.8.4 Installation of door leaves

2.8.4.1 Set the door leaves fitted with door hangers and door slide blocks into the door guide and the sill slot (Fig.15). Adjust the spacers on the door hanger until the door

leaves meet the following requirements:

a. The verticality of the vertical sides of the door leaves shall be not greater than 1/1000.
b. The crack between both door leaves shall be less than 2mm along the whole height.
c. The clearance between the door leaves and the jamb sill shall be 3~5mm.
d. The resistance along the guide rail shall be not greater than 300N when the door leaf is towed at any position in the center.

2.8.5 Installation of other components

2.8.5.1 Installation of door lock (Fig.17)

Install the locking hook on the right door hanger and then install the electrical box on the upper beam of the door frame. Adjust its position to ensure compliance with the following requirements:

a. Centers of the locks of all landing doors shall be on the same plumb line and at a distance of 120 from the door centers with maximum error not greater than 2mm.

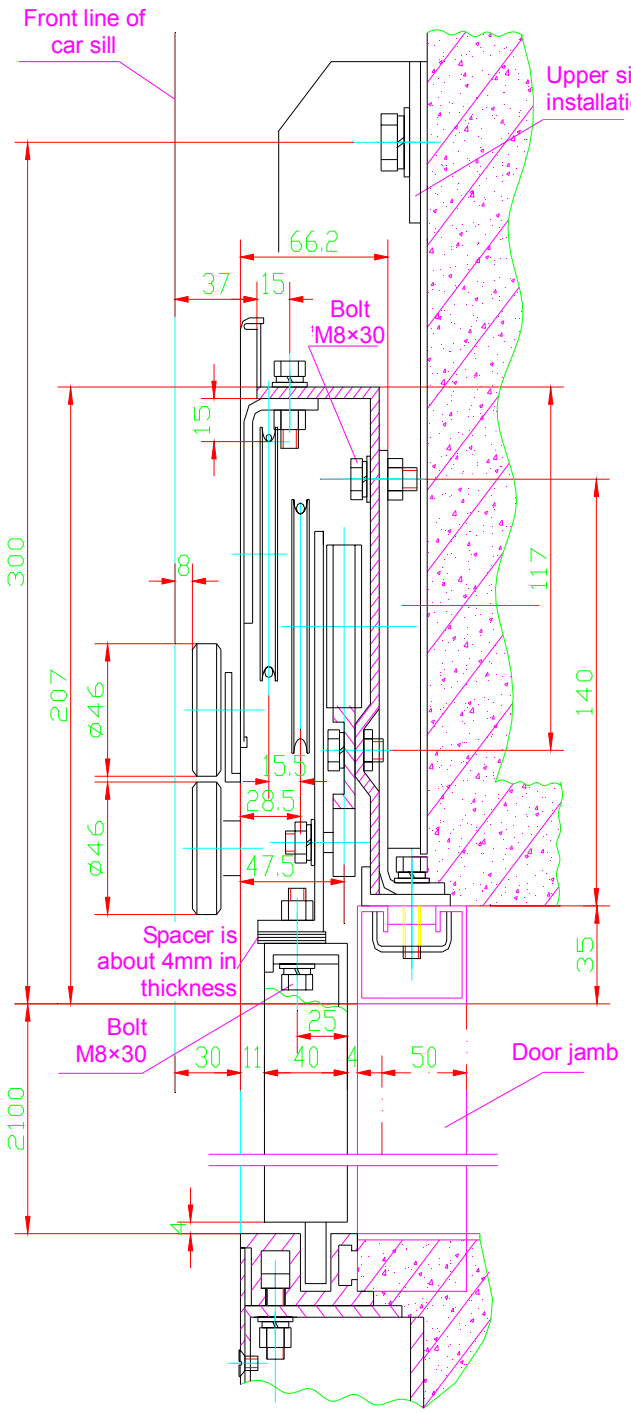

Figure 14

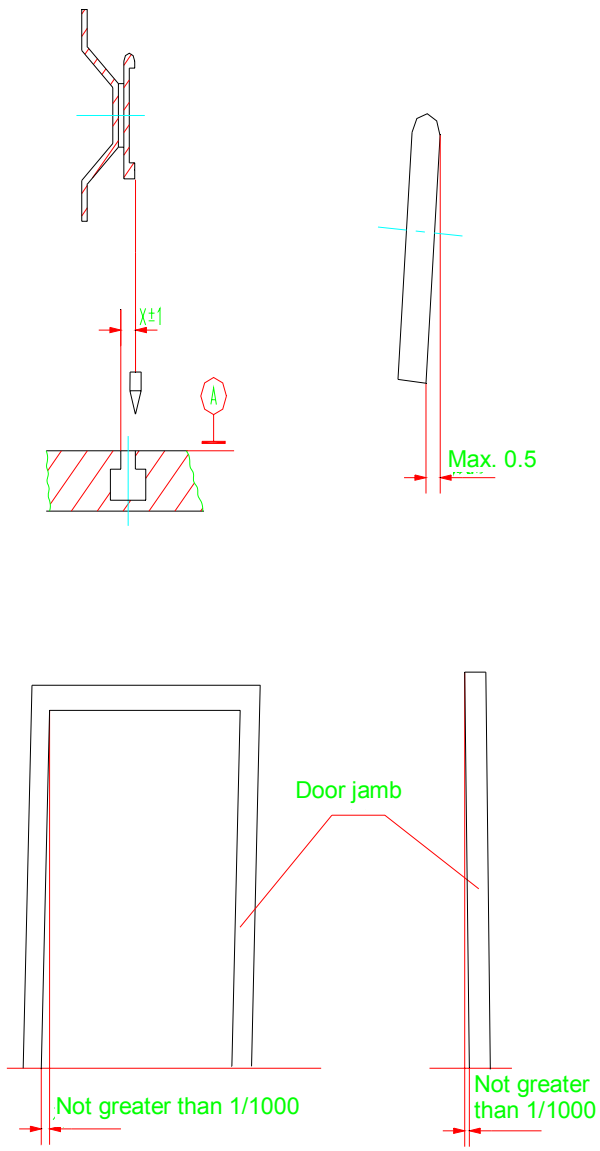

Figure 15

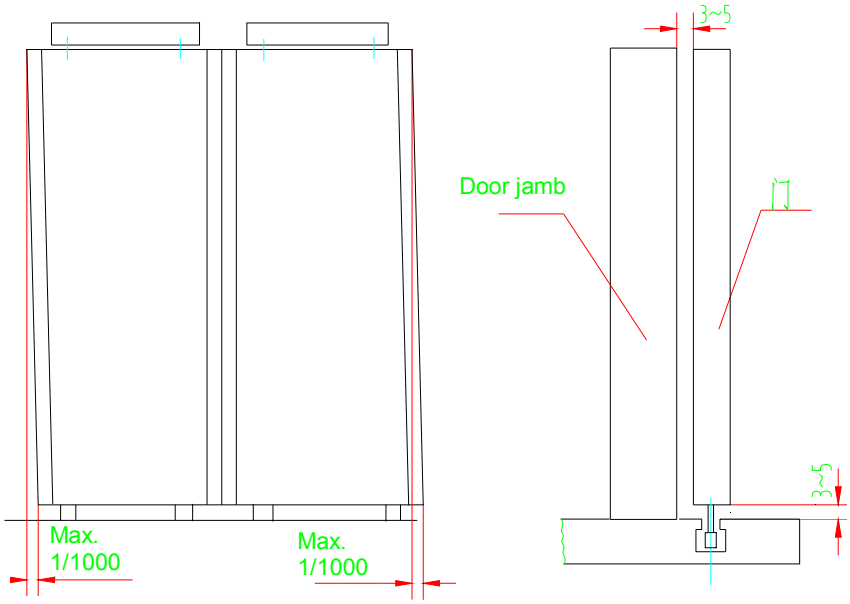

Figure 16

b. The distance from the outer end faces of the rollers to the edge of the sill shall be 8±1mm.

c. Before the safety contacts of the door lock are connected, the locking hook of the door lock must be engaged by more than 7mm.

2.8.5.2 Installation of door key and unlocking device

Install the unlocking device on the right door hanger and the door key on the right door leaf. The door key shall be able to easily prop up the locking hook.

2.8.5.3 Installation of plug-in switch and apron

Install the apron at the front edge of the sill and install the socket for the plug-in switch. Install the plug of the plug-in switch on the cross-beam of the door frame.

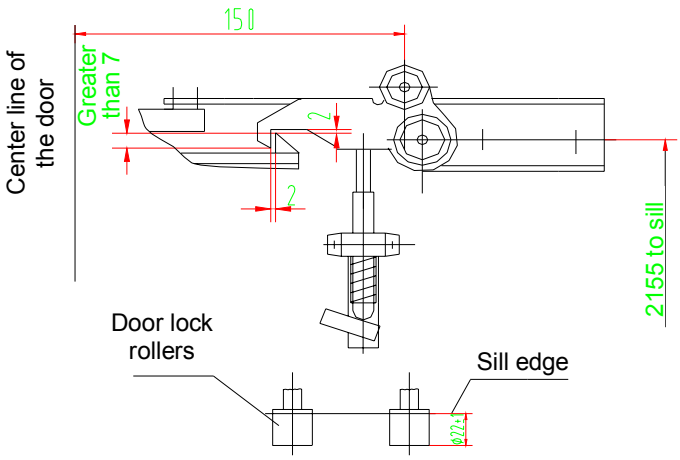

Figure 17

2.9 Installation of hoisting machine

2.9.1 Installation of hoisting machine with machine room

2.9.1.1 Installation of supporting beams

2.9.1.1.1 Fix a horizontal steel wire in an appropriate position in the machine room. Hang two plumb lines from the steel wire, allowing the plumb lines to pass through the steel wire ropes and aligning them to the car center and counterweight center on the template holder (Fig.18).

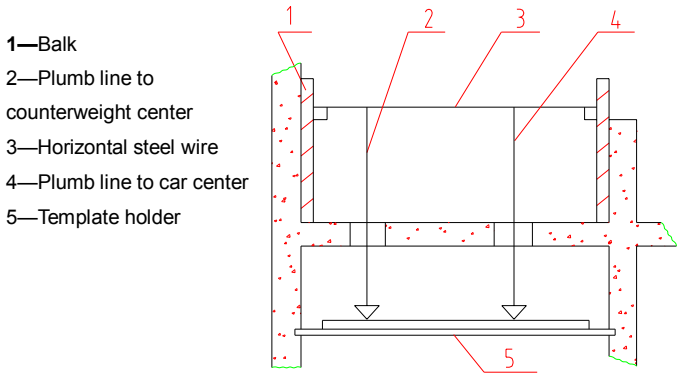

Figure 18

2.9.1.1.2 Use both plumb lines as the reference to place the supporting beams according to the dimensions stated in the plane layout of the hoistway. Be sure to meet the following requirements (Fig.19):

a. The levelness of the upper surfaces of the supporting beams shall be not greater than 2/1000.

b. The height difference between beams shall be not greater than 0.5.

c. The wall-embedded part of each supporting beam shall be at least 20mm past the wall center and shall be not less than 75mm in length.

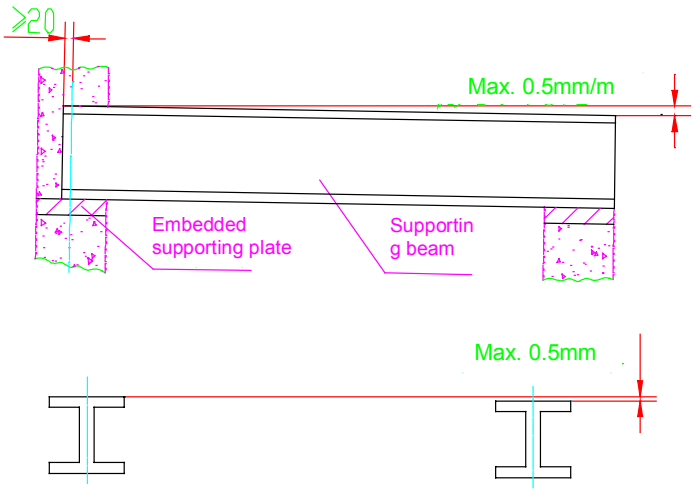

Figure 19

2.9.1.1.3 Weld the supporting beams to the embedded plates and use #400 cement mortar to cast the part in the wall wall.

2.9.1.2 Installation of hoisting machine

2.9.1.2.1 Installation of hoisting machine for passenger elevator (Fig.20)

A. Use a chain block to lift the bed frame of the hoisting machine onto the supporting beams.

B. Use a chain block to lift the hoisting machine onto the bed frame by following the hoisting instructions of the hoisting machine, and fasten it with bolts.

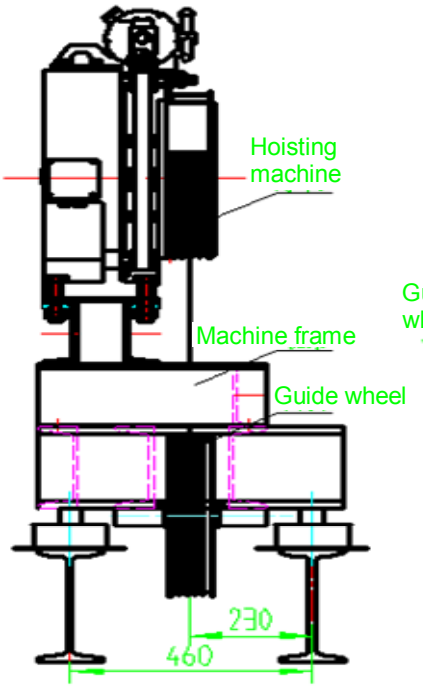

Figure 20

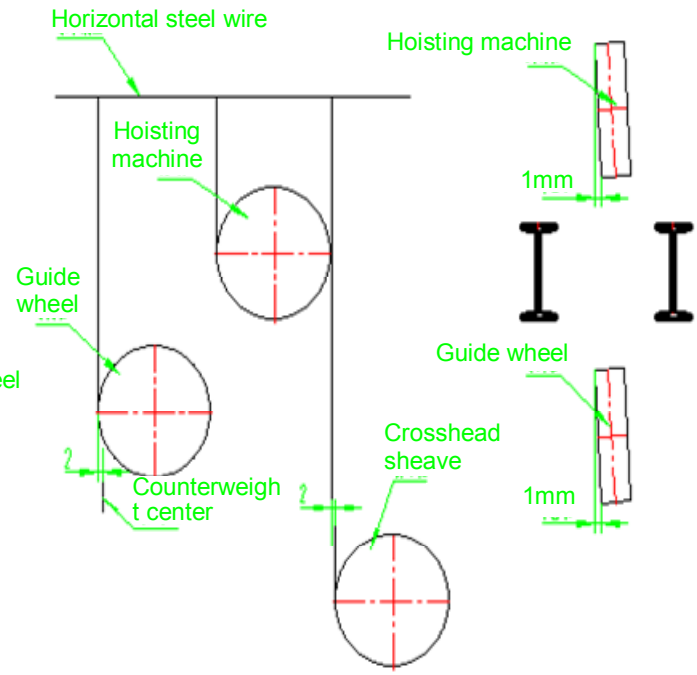

Figure 21

C. Adjust the position of the hoisting machine with both plumb lines as the reference (Fig.21). Be sure to meet the following requirements:

a. The error between the center of the steel wire rope on the traction sheave and the guide wheel of the car in the forward and backward directions (to the counterweight) shall be not greater than 2mm. The error between the left and right directions shall be not greater than 1mm.

b. The verticality error of the sheave shall be not greater than 1mm.

D. After the hoisting machine is completely adjusted, use the pressure plates on the buffer assembly to fix the bed frame of the hoisting machine onto the supporting beams.

2.9.2 Installation of hoisting machine for passenger elevator without machine room

(or with small machine room) (Fig.22a and Fig.22b)

2.9.2.1 Installation of hoisting machine

2.9.2.1.1 Determine the position of the hoisting machine brackets according to the layout drawings of the elevator and the hoistway and both traction sheave center lines on the template holder (this position shall be such that there is a 300mm space from the top of the hoisting machine to the top of the hoistway and the top of the hoisting machine is level to the top surface of the counterweight guide after the hoisting machine is installed). Drive the steel expansion bolts into the walls and pre-mount both hoisting machine brackets. Adjust the levelness of both hoisting machine brackets to make sure it is not greater than 2mm. Then tighten up the bolts.

2.9.2.1.2 Rest the base plate of the hoisting machine onto the hoisting machine brackets and pre-weld it to the brackets. Adjust the levelness and center position of the base plate. Make sure the levelness error of the base plate is not greater than 2mm. Then securely weld the base plate to the brackets. The welds shall be continuous and secure on both sides.

2.9.2.1.3 Use both lifting hooks on the top of the hoistway to hang the chain blocks. Use the chain blocks to lift the hoisting machine onto the brackets. Assemble the gearless hoisting machine with its base plate. Then perform fine adjustment of the hoisting machine with both plumb lines as the reference. Be sure to meet the following requirements:

a. The errors between the center positions of the steel wire ropes on the traction sheave and the two plumb lines shall be not greater than 1mm.
b. The verticality error of the sheave shall be not greater than 1mm.
c. The levelness error of the hoisting machine base shall be not greater than 1mm.
d. The distance from the center of the traction sheave to the bottom surface of the car guide shall be 55mm.

2.9.2.2 Installation of supporting steel channels of hoisting machine

2.9.2.2.1 After the hoisting machine is properly adjusted, place the supporting steel channels between the base plate of the hoisting machine and the guide rail supports beneath the base plate. Securely weld the supporting steel channels to the base plate and the rail supports. The welds shall be continuous.

2.9.2.2.2 Weld the base plate of the hoisting machine to the counterweight guide beneath the base plate with continuous and secure welds.

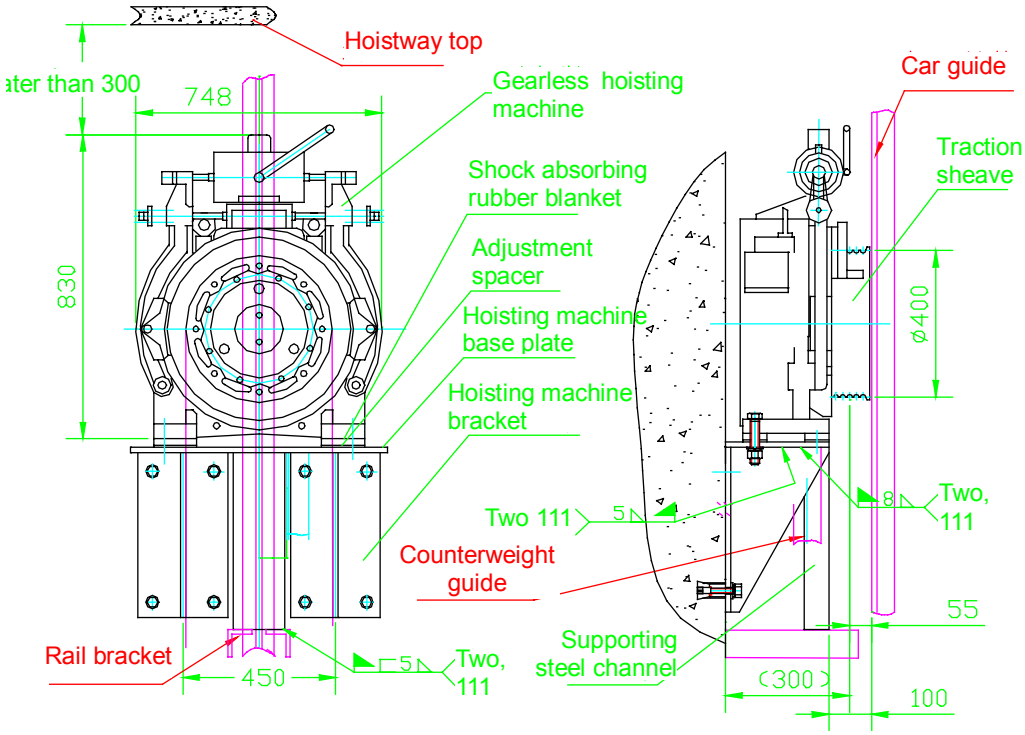
Hoistway top
ater than 300
748
830
Gearless hoisting machine
Shock absorbing rubber blanket
Adjustment spacer
Hoisting machine base plate
Hoisting machine bracket
Car guide
Traction sheave
ø400
Two 111
5
8
Two, 111
Counterweight guide
55
Rail bracket
450
5
Two, 111
Supporting steel channel
(300)
100

Figure 22 a

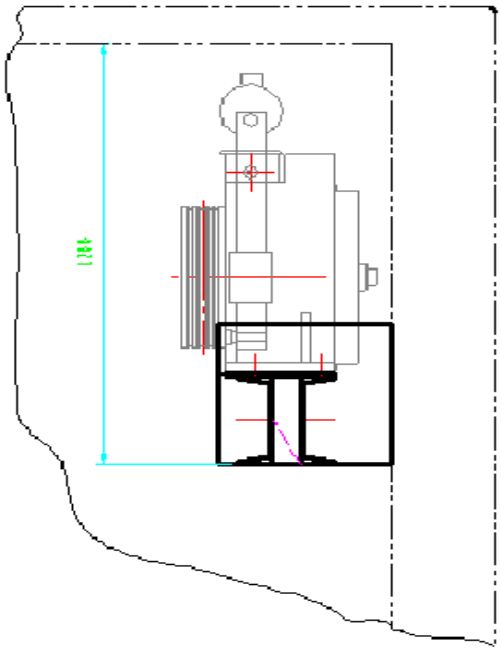

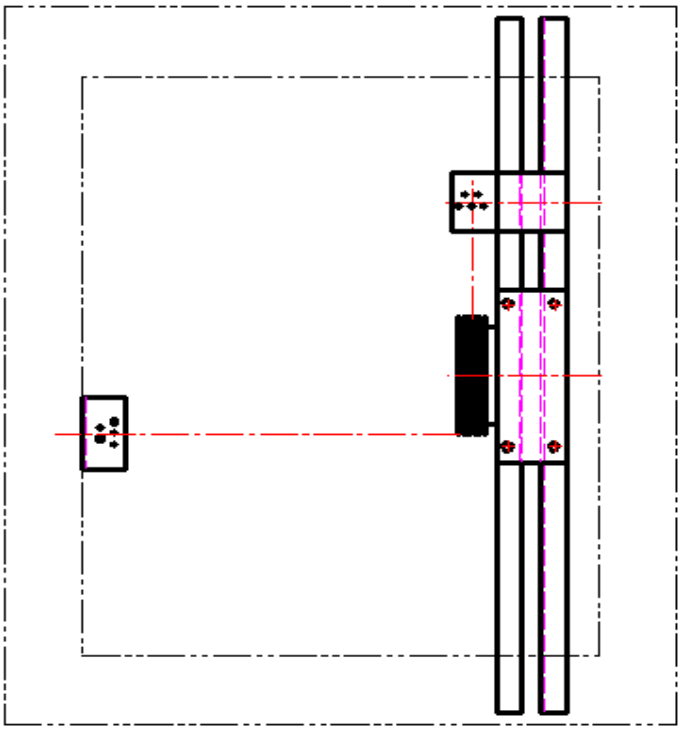

Figure 22 b

2.10 Installation of buffers

A hydraulic buffer is usually used. The buffers are usually selected according to the rated speed (See diagram below).

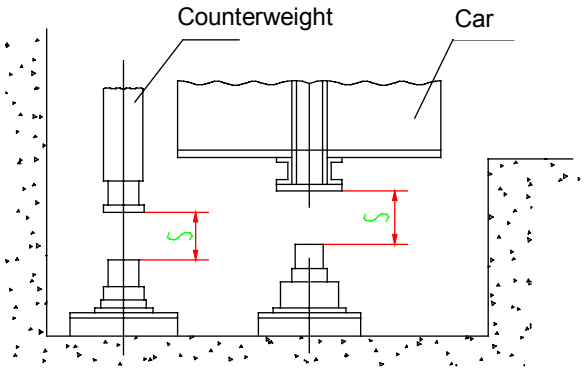

Figure 23

2.10.1 Installation of hydraulic buffers

a. The quantity, positions, and dimensions of buffers to be installed shall match the construction layout drawing of the elevator hoistway.

b. Check the corrosion on the buffer and the smoothness of the oil way. Perform cleanups when necessary.

c. Install the buffer base and hydraulic buffer according to the layout drawing.

d. Adjust the buffer under the installed buffer meets the following requirements:

(1) When the car is in the leveling position of either of the terminal landings, the distance S from the buffer plates on the car and the counterweight device shall to the upper surface of the buffer shall be 150~400mm.

(2) The deviation between the car, the center of the counterweight striking plate, and the center of the buffer shall be not greater than 20mm.

(3) The distance between the upper surfaces of both buffers of the car and both buffer plates on the car shall be not greater than 2mm.

(4) The verticality of the buffer plunger shall be not greater than 0.5%.

f. Use bolts to connect the contact connecting plate to the grip ring. Rotate the grip ring until the switch contacts the head of the contact. Release the contact fastening bolt and adjust the contact position until it is actuated. Then fasten the contact.

g. Oiling the buffer: use a spanner to open the screw plug. Inject N46 mechanical oil until the oil level reaches between both graduated lines of the oil level indicator. Then tighten up the screw plug.

h. After the buffer switch is actuated, it must be manually reset before the elevator can run again.

2.11 Installation of car frame and safety gears

The car is usually assembled on the top terminal landing because the top terminal landing is closest to the machine room and thus convenient for lifting the parts and checking dimensions of the machine room.

2.11.1 Remove the scaffolds of the top layer. If the hoistway has a brick structure, drill two parallel 250×250mm holes as wide as the landing door in the hoistway wall opposite to the landing door. The depth of the holes shall be not less than 75mm and such that the holes go beyond the wall center by 20mm. If the hoistway has a concrete structure, drive expansion bolts into the hoistway wall opposite to the landing door to fix the steel angle bars.

2.11.2 Use two 200×200mm balks or square tubes as the supporting beams. Put one end into the hole or steel angle bar and the other end onto the floor at the landing door. Make sure its levelness is not greater than 2/100 and then tension or spot-weld the supporting beam (Fig.24).

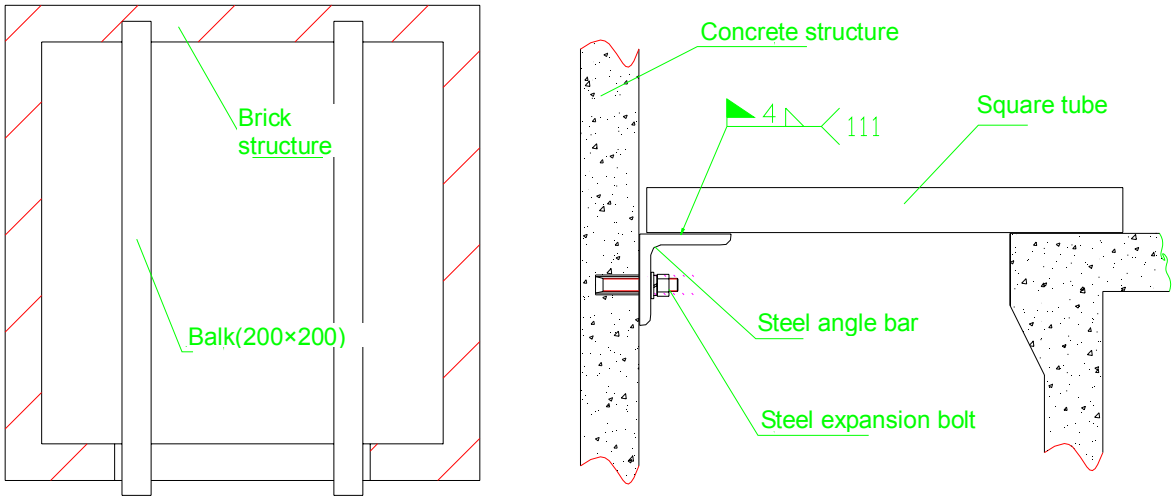

Figure 24

2.11.3 Horizontally fix a ≥Φ50 round steel bar or Φ75×4 steel tube on the machine room supporting beams. If there is no machine room, use the lifting hooks on the hoistway top to hang the steel wire ropes (Φ13) and a chain block with suitable weight.

2.11.4 Lay flat the lower beam assembly of the car onto the supporting beams in the hoistway. The levelness of the upper surface of the beam shall be corrected until it is not greater than 2/1000.

2.11.5 Lift the vertical beams on both sides and fasten them to the lower beam with bolts. Make sure that the verticality of the vertical beams is not greater than 1.5mm over the whole height.

2.11.6 Lift the upper beam assembly and fasten it to both vertical beams with bolts. Correct the levelness of the upper beam until it is not greater than 2/1000. Correct the verticality of the vertical beams again until it is not greater than 1.5mm. The completely assembled car frame shall not have any torsional stress. Adjust the prestressing force of bolts for the upper beam assembly and the vertical beams until it is not less than $4.0X10^4$N·mm. Adjust the prestressing force of the lower beam assembly and the bolts to $5.0X10^4$N·mm.

2.11.7 When the hoist rope ratio is 2:1, fit both return rope sheaves to the upper beam assembly (Fig.25). If there is no machine room, fit both return rope sheaves to the lower beam assembly (Fig.26). Make sure the deviation of the center of the hoisting sheave rope race from the return rope sheave rope race at the car top (bottom) is not greater than 1mm and the dimensional deviations between the clearances a, b, c, and d (Fig.27) between the return rope sheaves and the upper beam are not greater than 1mm.

The verticality of each rope sheave shall be not greater than 0.5mm.

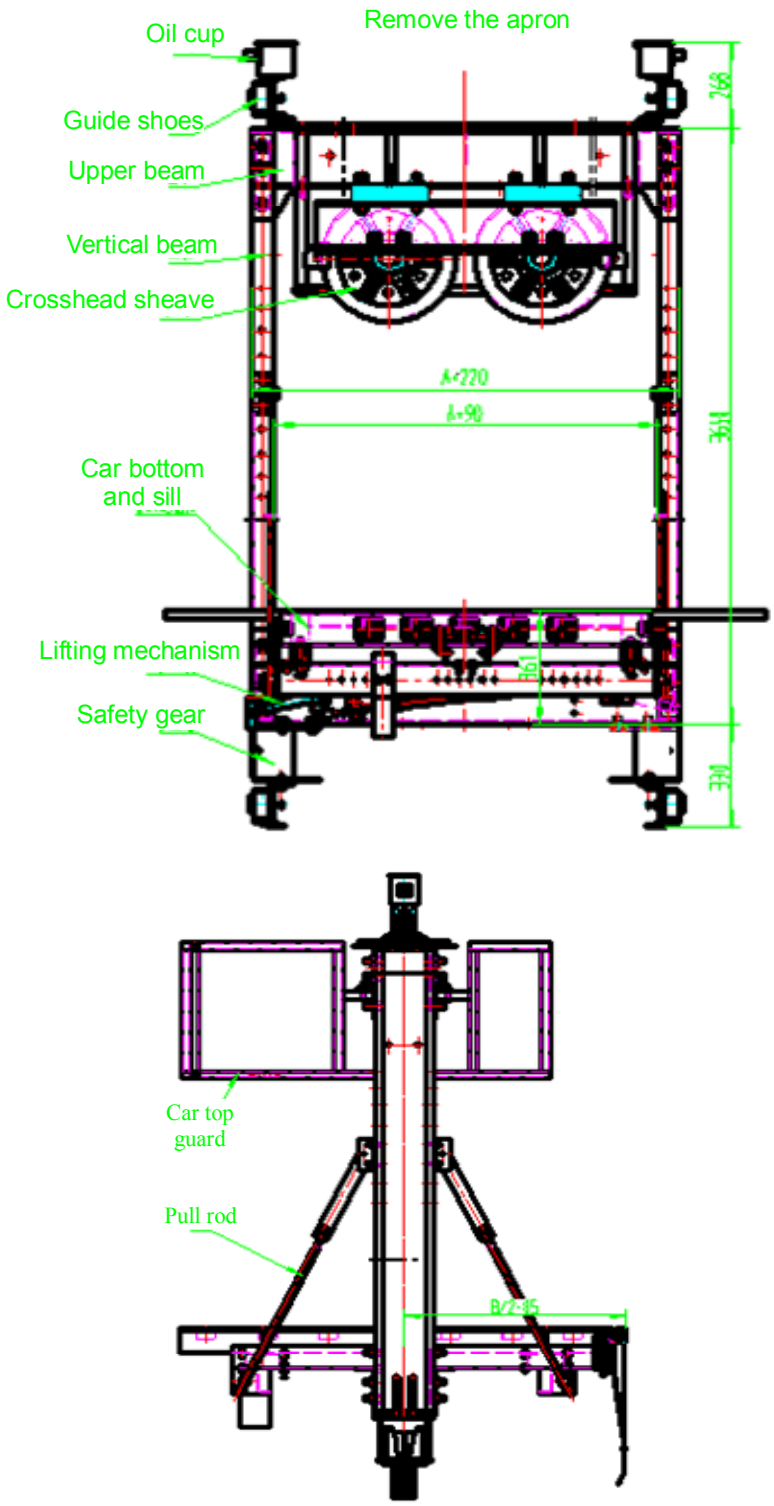

Figure 25a

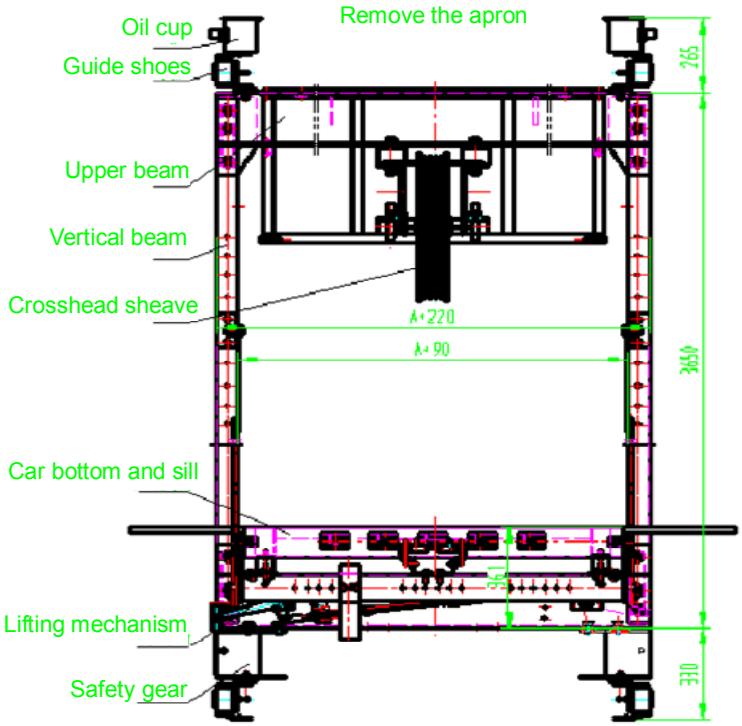
Oil cup
Remove the apron
Guide shoes
Upper beam
Vertical beam
Crosshead sheave
Car bottom and sill
Lifting mechanism
Safety gear
265
330

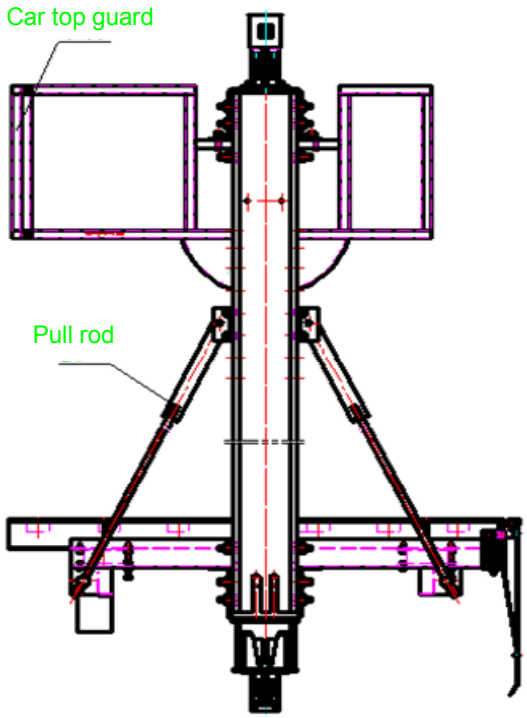
Car top guard
Pull rod

Figure 25b

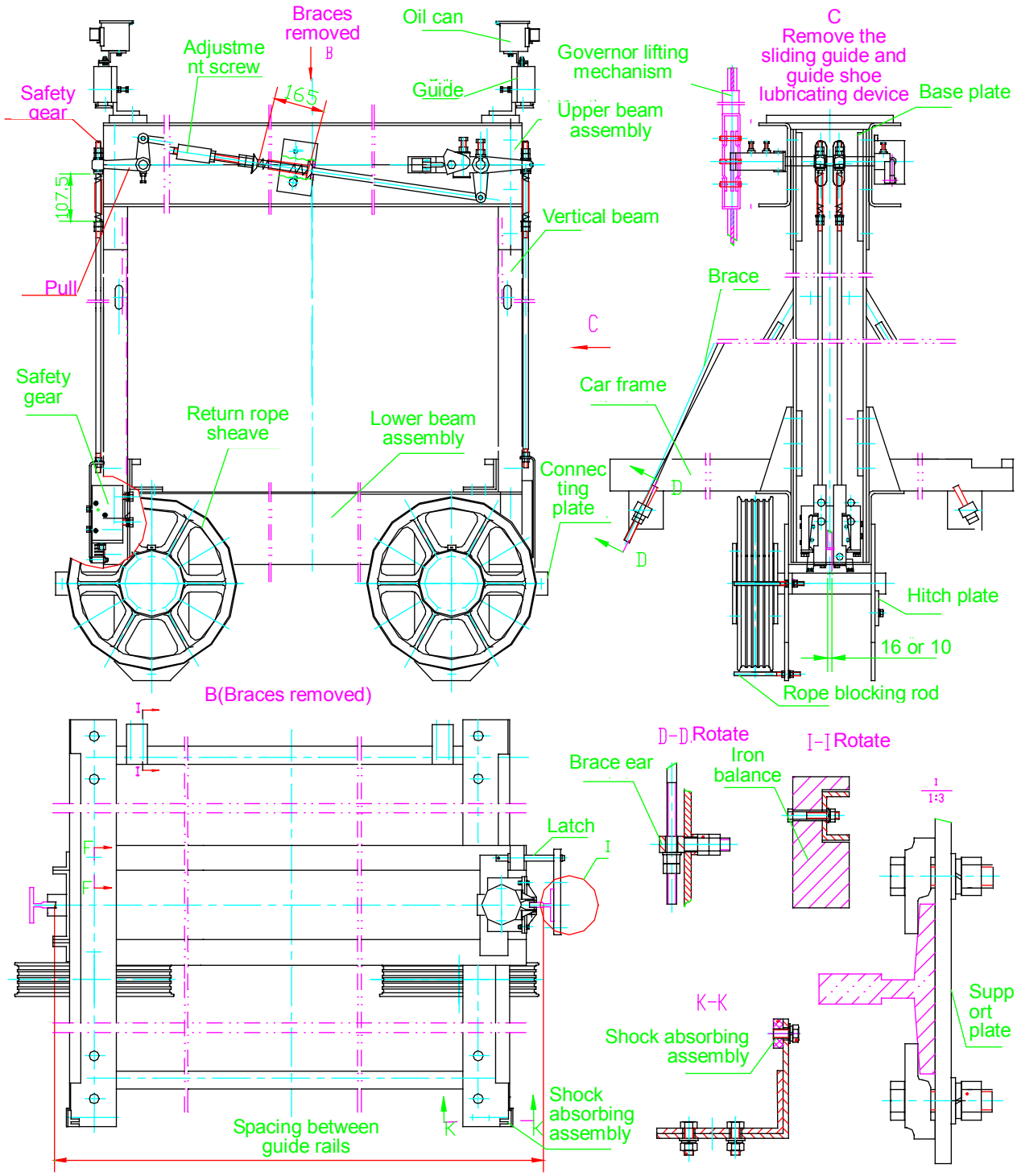
Braces removed
B
Oil can
Adjustment screw
Safety gear
165
Guide
Governor lifting mechanism
Upper beam assembly
C
Remove the sliding guide and guide shoe lubricating device
Base plate
107.5
Vertical beam
Pull
Brace
C
Safety gear
Car frame
Return rope sheave
Lower beam assembly
Connecting plate
D
D
Hitch plate
16 or 10
Rope blocking rod
B(Braces removed)
I
I
D-D Rotate
Brace ear
Iron balance
I-I Rotate
1:3
Latch
I
F
F
K
K-K
Shock absorbing assembly
Support plate
Shock absorbing assembly
Spacing between guide rails
K
K

Figure 26

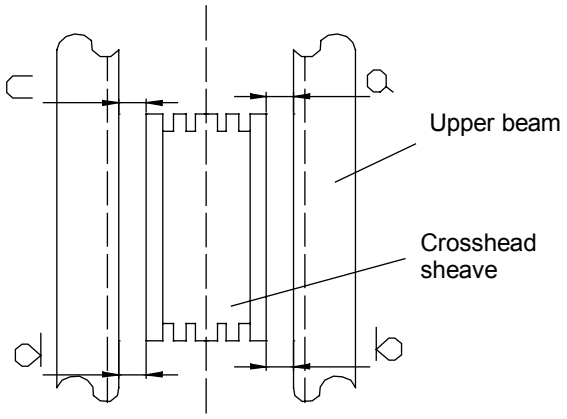

Figure 27

2.11.7 Fit the safety gear to the lower beam assembly or into the vertical beam. Correct the clearances between the safety gear and the guide rails, which are usually 2~3mm. Make sure the clearances on both sides are even and uniform.

2.11.8 Remove the nut on top of the spring of the safety gear lifting rod (do not move the spring) according to Fig.26. Then insert it into the pull arm hole. Install the ball gasket and nut. Make sure that the length of the spring is between 107mm and 165mm and that both safety gears can be actuated simultaneously.

2.11.9 Prestress the four guide shoes onto the car frame according to Fig.26. Correct the clearances to the guide rails and make sure they are even. Make sure the center planes of the upper and lower guide shoes coincide with each other, and then fasten the guide shoes.

2.11.10 For a passenger elevator, lay flat the car frame on the lower beam assembly and use four sets of wood spacers to adjust its levelness until the levelness is not greater than 2/1000. Then fasten the car frame onto the lower beam. Use pull rods to securely connect the vertical beams with the frame or the car bottom. Adjust the slanted pull rod nuts so that the levelness of the bottom plate is not greater than 2/1000.

2.12 Installation of counterweight

2.12.1 Follow the drawing to erect and strut the counterweight with 100×100mm wood balks. Make sure the supporting surfaces are horizontal. The height of supporting surfaces shall be such that distance S between the ram of the counterweight housing and the upper surface of the buffer is 150~400mm. If the steel wire rope has not been prestressed, S shall be set to the maximum value (Fig.28). But if the top floor of the elevator is low, S shall be set to a lower value to make sure that the space between the car and the counterweight top meets relevant requirements.

2.12.2 Remove the guide shoes from one side of the counterweight housing and

insert the counterweight housing into the clearance between the counterweight guide to install the guide shoes.

2.12.3 Adjust the clearances between the guide shoes and the guide rails until the center lines of the four guide shoes coincide with the center lines of the corresponding guide rails with maximum error not greater than 0.5mm. All the center lines shall be kept on the same plumb

2.12.4 When the hoist rope ratio of the elevator is 2:1, the counterweight return rope sheave shall be fitted to the upper beam assembly.

2.12.5 Fig.29 shows the installation of the counterweight return rope sheave of an elevator without machine room. To determine the rotating angle of the counterweight return rope sheave, hang a plumb line from the traction sheave and determine the position of the return rope sheave according to the plumb line and the counterweight center. After the return rope sheave is properly installed, lock the two M42 nuts and insert the cotter pins. Then weld the positioning steel angle bars onto the upper beam assembly of the counterweight housing.

2.12.6 Counterweight fillers: Prefill the counterweight housing with counterweight fillers whose total weight is equal to or greater than the deadweight of the car in order to prevent the car from slipping away before the brake is adjusted after the scaffolds are removed. After a balance is achieved through commissioning, use dampers and pressure plates to fix the counterweight fillers in the counterweight housing.

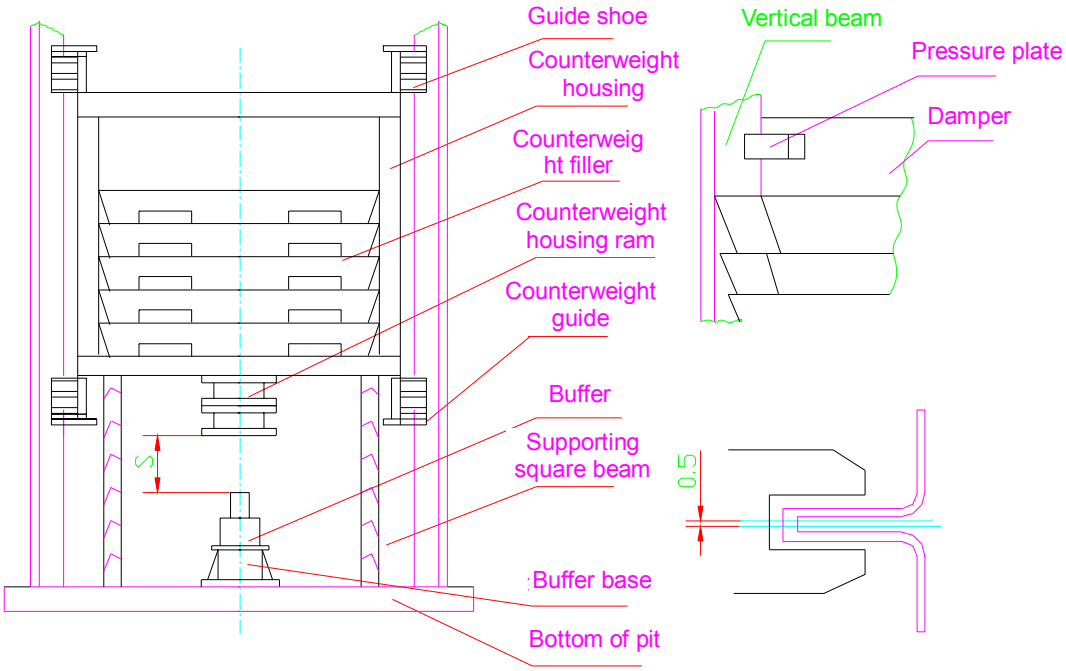

Figure 28

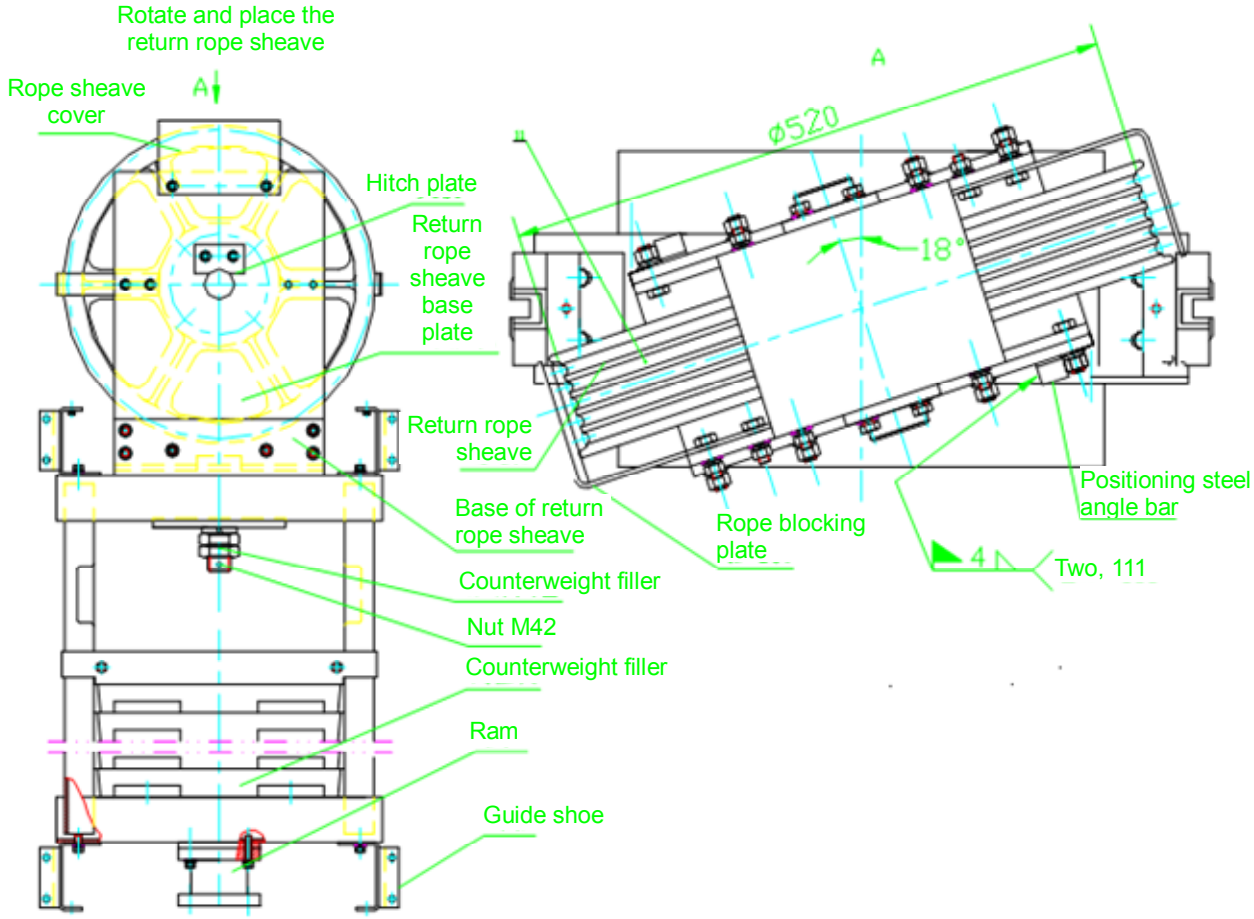

Figure 29

2.13 Installation of hoisting ropes

2.13.1 When the car is in the leveling position of the highest floor (the raised height of the car shall be taken into consideration), the counterweight is at the bottom floor, and the distance from its counterweight ram to the buffer in the pit is S, use a 2.5mm^2 electric wire to measure the working length needed for the steel wire rope and allow for 500mm margin at each end. Plus the raised height of the car, this is the actual length of the steel wire rope. Before the steel wire rope is cut, bind both ends with steel wires (Φ0.7~Φ0.9) at lengths not less than 15mm to prevent the strands from getting loose.

2.13.2 Installation of hoisting ropes when the hoist rope ratio is 1:1:

2.13.2.1 Run one end of the steel wire rope around the traction sheave in the machine room and then gradually drop it through the car rope hole to the car frame.

2.13.2.2 Connect the rope hitch on the car frame (excluding steel wire rope) to the car frame according to Fig.30. Then run the bundled steel wire rope through the wedge sleeve. After loading the wedge, run the steel wire rope end back and check if the return length is appropriate. Then pull it up to tension the rope and fix the wedge into the wedge

sleeve. Then install the steel wire rope hitch according to Fig.32.

2.13.2.3 Run the other end of the steel wire rope around the guide wheel, put it through the counterweight rope hole, and then gradually drop it to the counterweight housing.

2.13.2.4 Follow the same method of 2.13.2.2 to connect the other end of the steel wire rope and the rope hitch to the counterweight housing.

2.13.2.5 Adjust dimension e according to Fig.30 so that tension is evenly distributed among the steel wire ropes with deviations less than 5%.

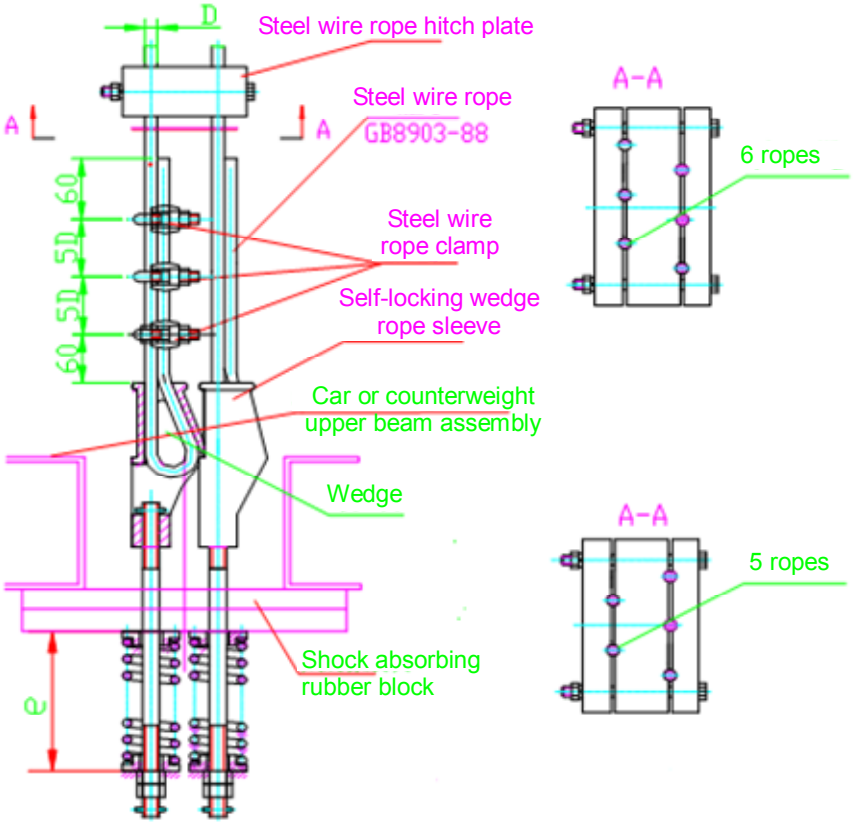

Figure 30

2.13.3 Installation of hoisting rope when the hoist rope ratio is 2:1:

2.13.3.1 Weld the hitch plate to the supporting beams of the hoisting machine according to Fig.31 with the center of the car top return rope sheave race center as the reference. While installing the hitch plate, make sure that the deviation of the hitch plate center from the center of the car top return rope race is not greater than 1mm.

2.13.3.2 Weld steel channels to the supporting beams and embedded plates of the hoisting machine according to Fig.31 with the center of the counterweight return rope sheave race center as the reference. Make sure that the levelness of both steel channels

is 1/1000 and their height difference is not greater than 0.5mm.

2.13.3.3 Weld the counterweight hitch plate to the supporting beams of the counterweight hitch plate. While installing the hitch plate, make sure that the deviation of the hitch plate center from the center of the counterweight return rope race is not greater than 1mm.

2.13.3.4 Run both ends of the hoisting steel wire rope around the traction sheave and then gradually lower them into the hoistway through the preformed steel wire rope hole. The ends of both ropes shall respectively run through the car top return rope sheave and the counterweight return rope sheave (Fig.31) and return to the supporting beams of the machine room.

2.13.3.5 Adjust dimension e according to Fig.31 so that tension is evenly distributed among the steel wire ropes with deviations less than 5%.

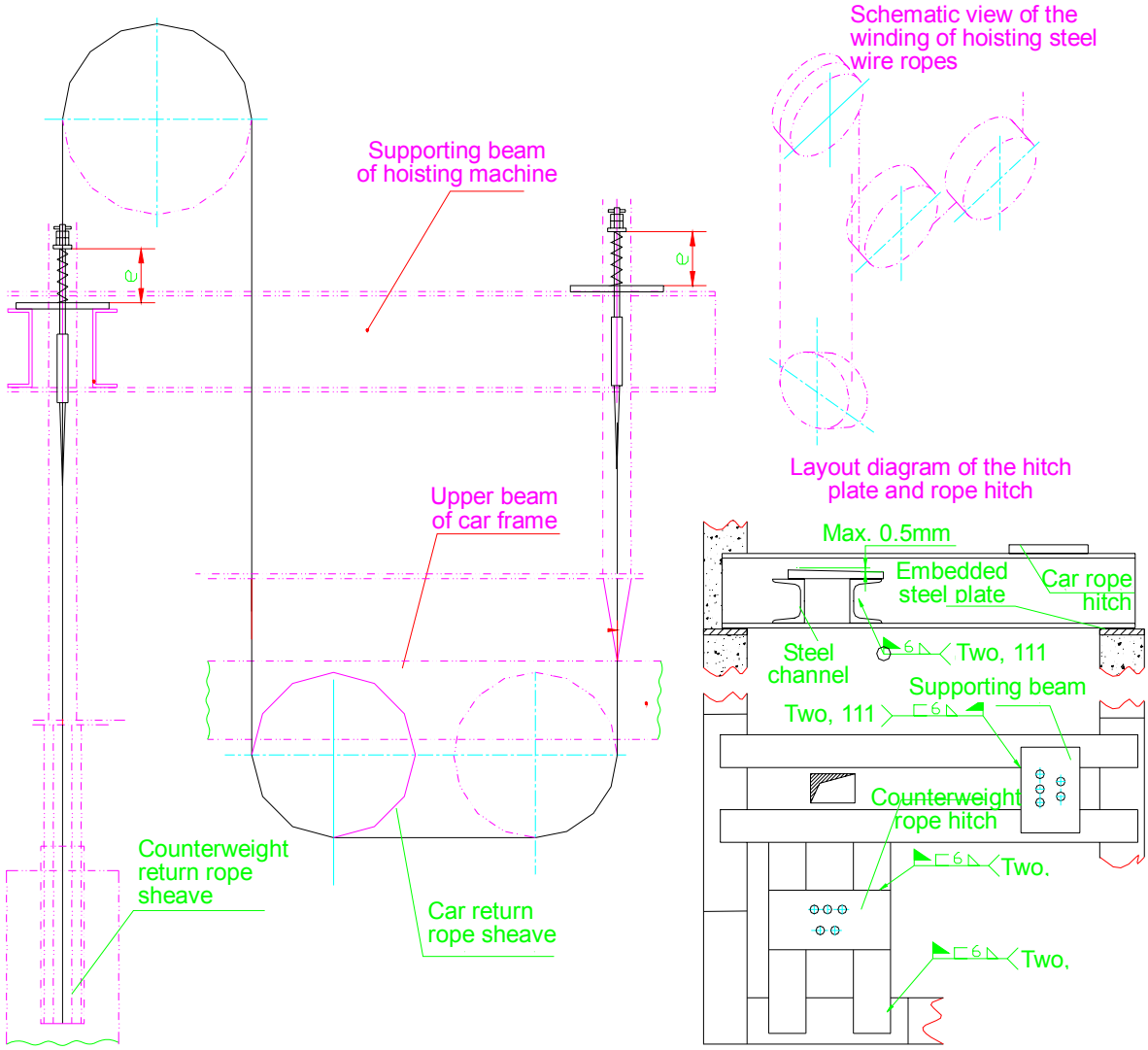

Figure 31

2.13.4 Installation of hoisting ropes of elevator without machine room

2.13.4.1 Use pressure plates to install the car rope bracket on the car guide according to Fig.32 with the center of the car bottom return rope sheave race as the reference. Drive expansion bolts into the hoistway wall and install bent plates. Use bolts to connect the bent plates to the car rope hitch bracket. While installing the hitch plate, make sure that the positional deviation of the center of the hitch plate from the center of the car bottom return rope sheave race is not greater than 1mm. Weld the bent plates to the car rope hitch bracket and the car rope hitch bracket to the car guide according to the drawing.

2.13.4.2 Drive expansion bolts into the hoistway wall according to Fig.32 and install the counterweight rope hitch bracket with the center of the counterweight return rope race center as the reference. Connect the counterweight rope hitch bracket to the guide with pressure plates. While installing the hitch plate, make sure that the positional deviation of the center of the hitch plate from the center of the counterweight return rope sheave race is not greater than 1mm. Weld the counterweight rope hitch bracket to the counterweight guide according to the drawing.

2.13.4.3 Following the drawing to run both ends of the hoisting steel wire rope around the traction sheave. Then return one end to the counterweight rope hitch bracket around the counterweight return rope sheave and the other end to the car rope hitch bracket through the car bottom return rope sheave.

2.13.4.4 Install the rope hitch according to 2.13.2.2.

2.13.4.5 Adjust dimension e according to Fig.32 so that tension is evenly distributed among the steel wire ropes with deviations less than 5%.

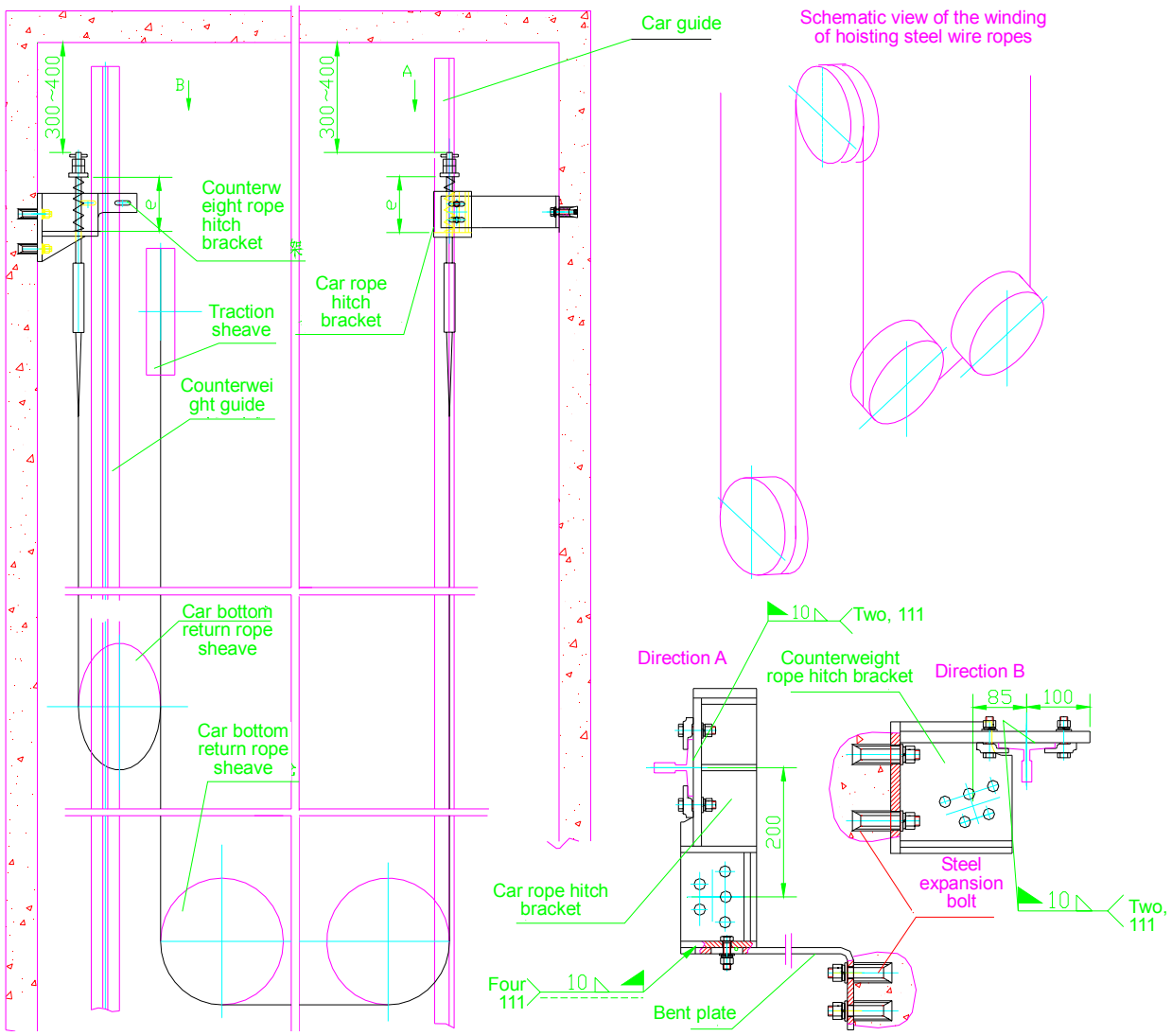

Figure 32

2.14 Installation of car

2.14.1 Install the weighing device on the car frame according to Fig.33.

2.14.2 Place the car bottom on the weighing device. Adjust the levelness of the car bottom. Use a level gauge to check if the levelness of its upper surface is not greater than 2/1000. Then use bolts to connect the car bottom to the weighing device.

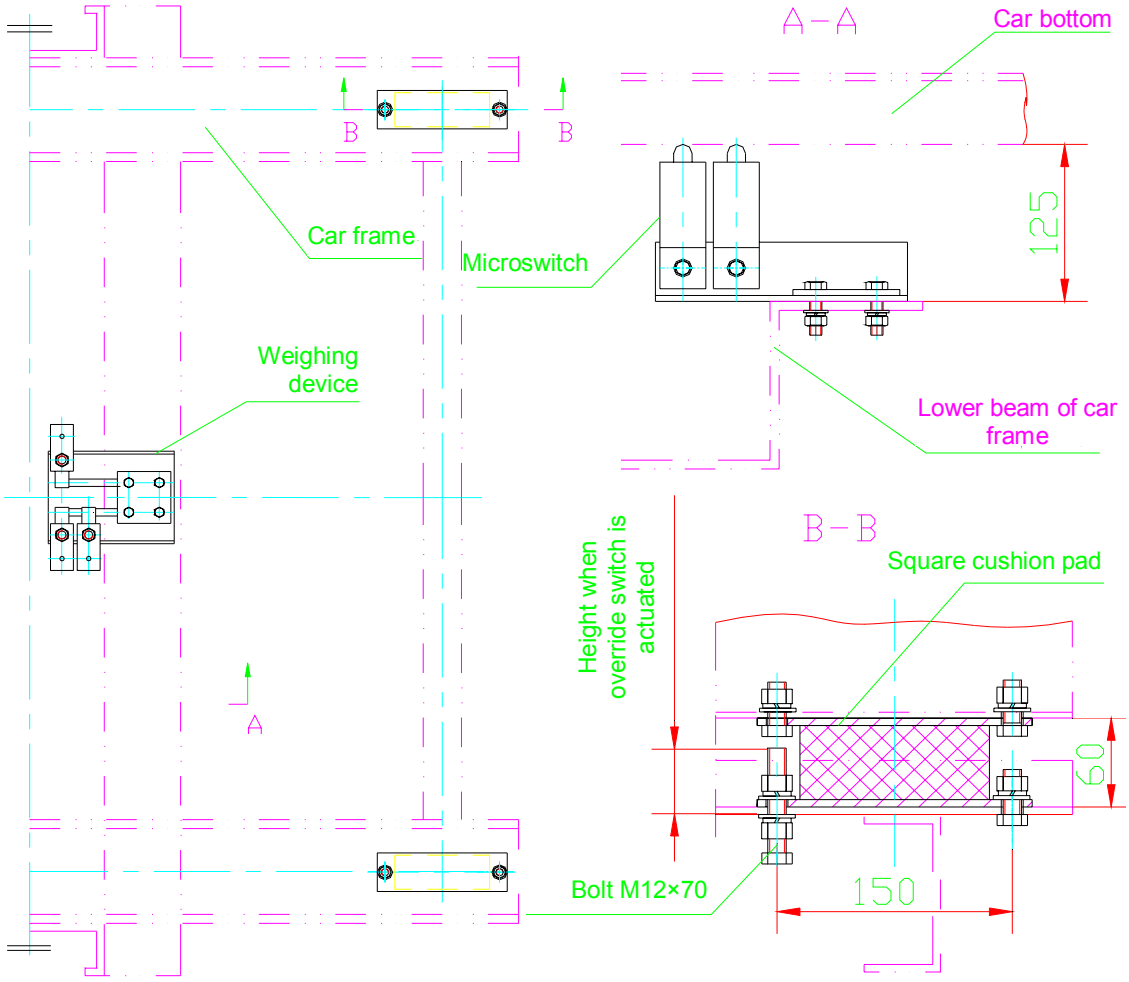

Figure 33

2.14.3 First assemble the individual parts of the car top and then use hoist cables to hang them beneath the upper beam assembly of the car frame.

2.14.4 Properly connect the sill fascia to the car bottom according to Fig.34. Install the sill and the apron on the sill fascia. Then assemble the car walls into several large pieces and install then on the car bottom. The verticality of the front right wall, car operation panel, and the lintel shall be not greater than 1/1000 and the verticality of the side walls shall be not greater than 2/1000. The terraces at the joints between side wall panels shall be not greater than 1mm.

2.14.5 During installation, make sure that the levelness of the sill is not greater than 2/1000 and the clearance between the car sill and the landing sill is 30±1mm.

2.14.6 Lower the suspended car top and connect it to the car walls with bolts according to Fig.34.

2.14.7 Install the car top snap ring between the car top and the vertical beams

according to Fig.34.

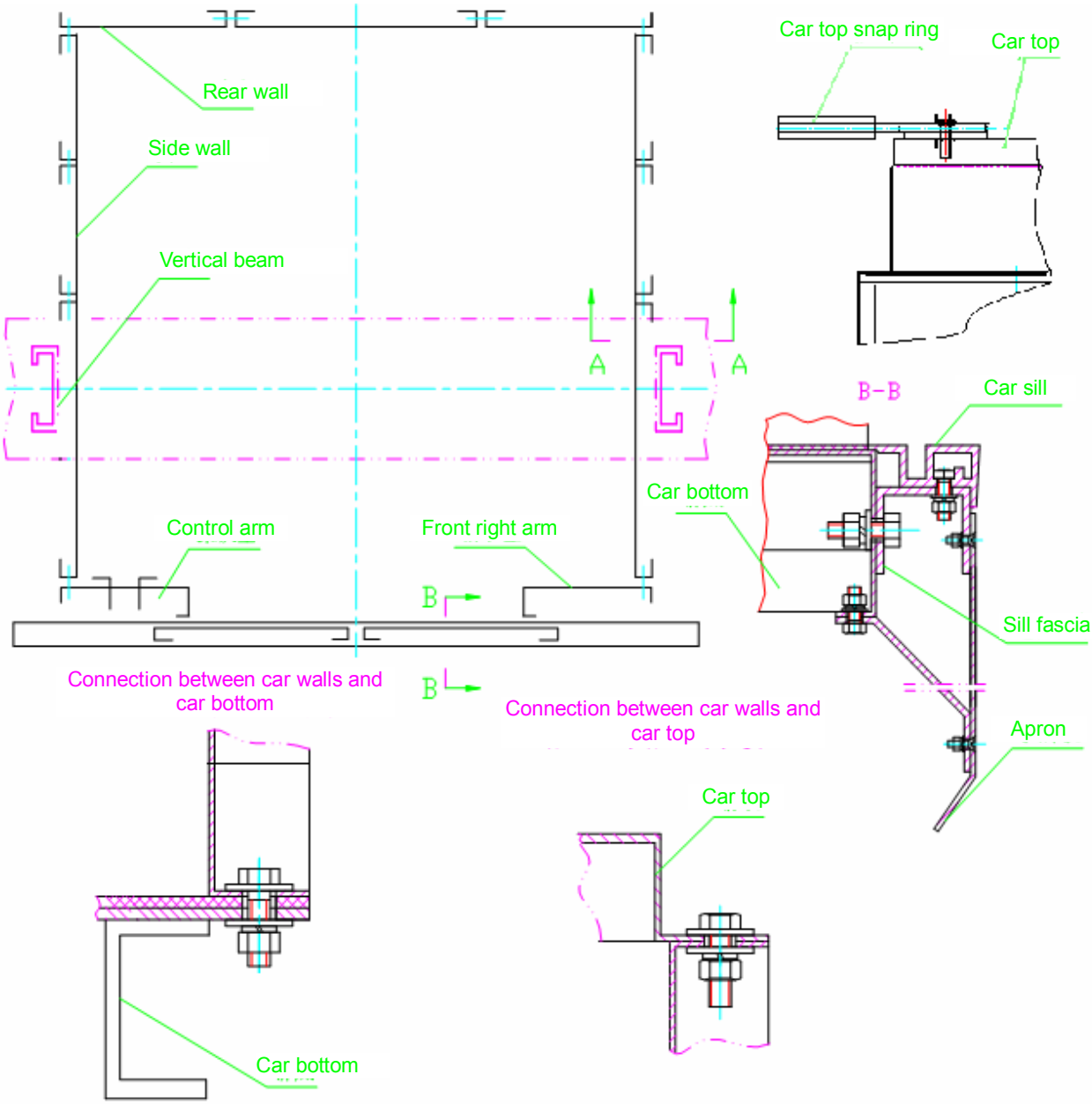

Figure 34

2.15 Installation of door operator

2.15.1 Install the cross-beam installation arm on the car frame according to Fig.35. Tighten up M16×35 bolts according to the size of C2L, keeping the arm level.

2.15.2 Installing the cross-beam: Install the cross-beam on the cross-beam installation arm. The deviation of the cross-beam center from the access center must be not greater than 2mm. Install the horizontal pull rod assembly and use the vertical pull rod assembly and adjustment bolts to adjust the guide height and the car door sill lines until the required guide dimensions are achieved.

2.15.3 Installation of car door (Fig.36)

2.15.3.1 Use adjustment spacers to adjust the distance between the door and the sill until it is 4±1. Do not expose the spacers. The clearance between the access columns and the door shall be 4±1mm within a range of 100mm from the upper and lower ends of the door and 3~6mm in other positions.

2.15.3.2 When the car door is closed, the maximum clearance shall be not greater than 1mm. The planimetirc difference between car doors shall be not greater than 1mm.

2.15.3.3 For installation of movable blades (See Fig.36), use adjustment spacers to control the inclination of the front, rear, left, and right of the movable blades and fixed blades within 1mm and then fixed them.

2.15.3.4 When the door is fully closed, adjust the adjustment spacers of the cam so that the spacing between blades is 72±1mm.

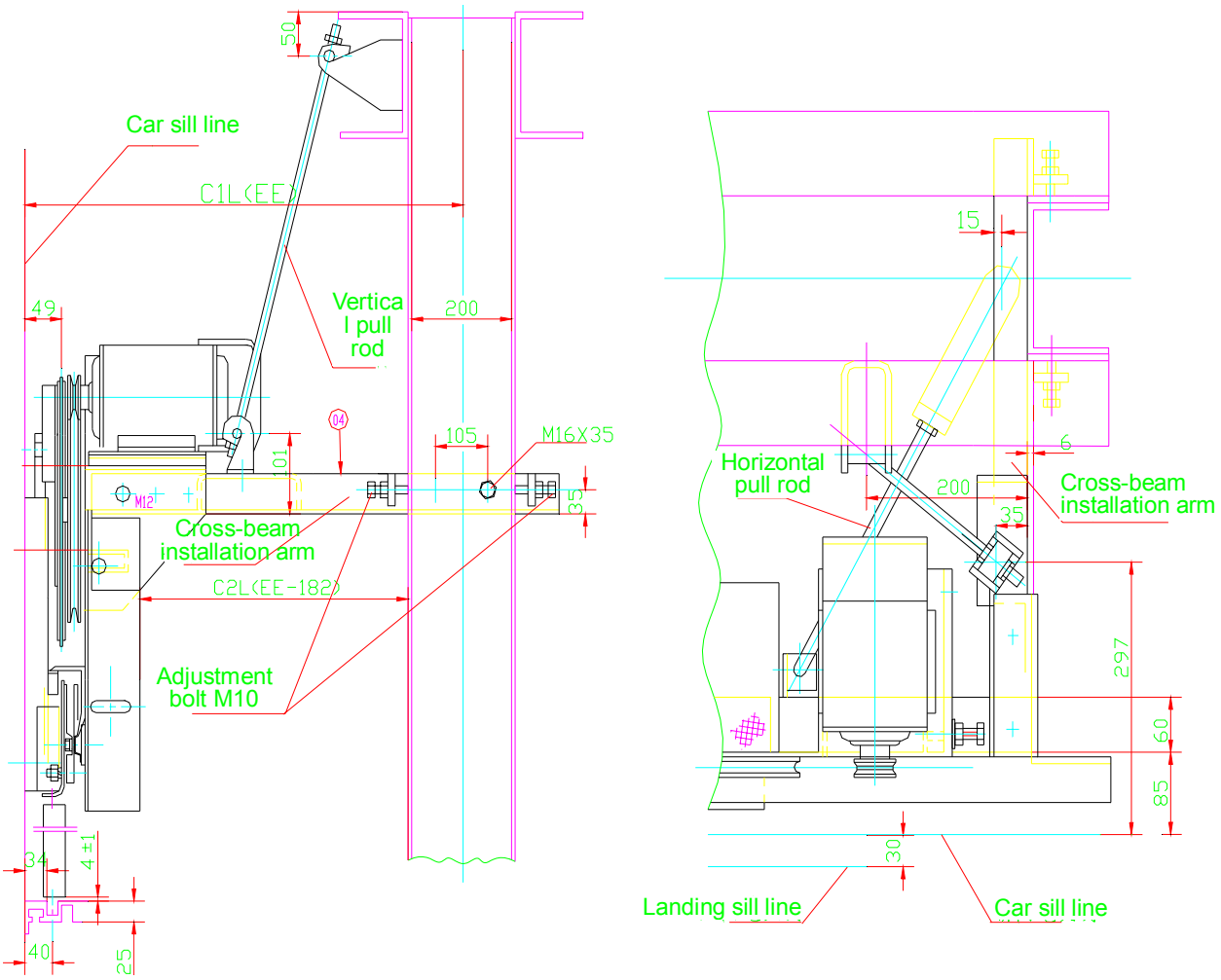

Figure 35

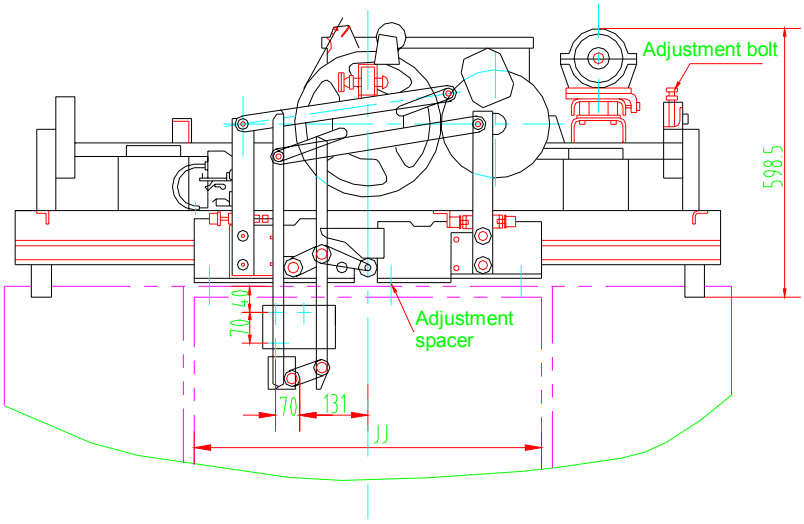

Figure 36

2.16 Installation of speed governor

The speed governor has passed strict inspection and tests before shipment. Therefore it is not allowed to adjust the pulling force or pressure on the speed governor spring or damage the seal during installation. The entire speed governor assembly shall be replaced in the event of any failure.

2.16.1 Installation of speed governor of elevator with machine room

2.16.1.1 Place the speed governor onto the floor of the machine room according to the layout drawing of the hoistway and Fig.37. A XS240 speed governor is used for the passenger elevator. Make sure that that arrow on the speed governor indicates the downward direction of the car.

2.16.1.2 Install the tensioning device of the speed governor on the car guide rails in the pit. Make sure the lowest point of the device matches the drawing.

2.16.1.3 Set a plumb line from the speed governor race. Run one end through the template to the rope hitch center in the speed governor lever on the safety gear of the car frame and the other end to the rope race of the sheave of the tensioning device in the pit. Check if they are on the same plumb line. If not, adjust the speed governor or the tensioning device. After proper adjustment, fasten the speed governor and the tensioning device.

2.16.1.4 Install the steel wire ropes according to Fig.37.

2.16.1.5 Technical requirements on speed governor installation:

a. The speed governor shall run steadily and have not vibration when interlocked with the safety gear.

b. The verticality of the speed governor sheave shall be not greater than 0.5mm.

c. The deviations of the steel wire rope of the speed governor from the guiding surface of the guide and the guide top shall be not greater than 10mm.

d. The tensioning force F of the steel wire rope shall be 1000N.

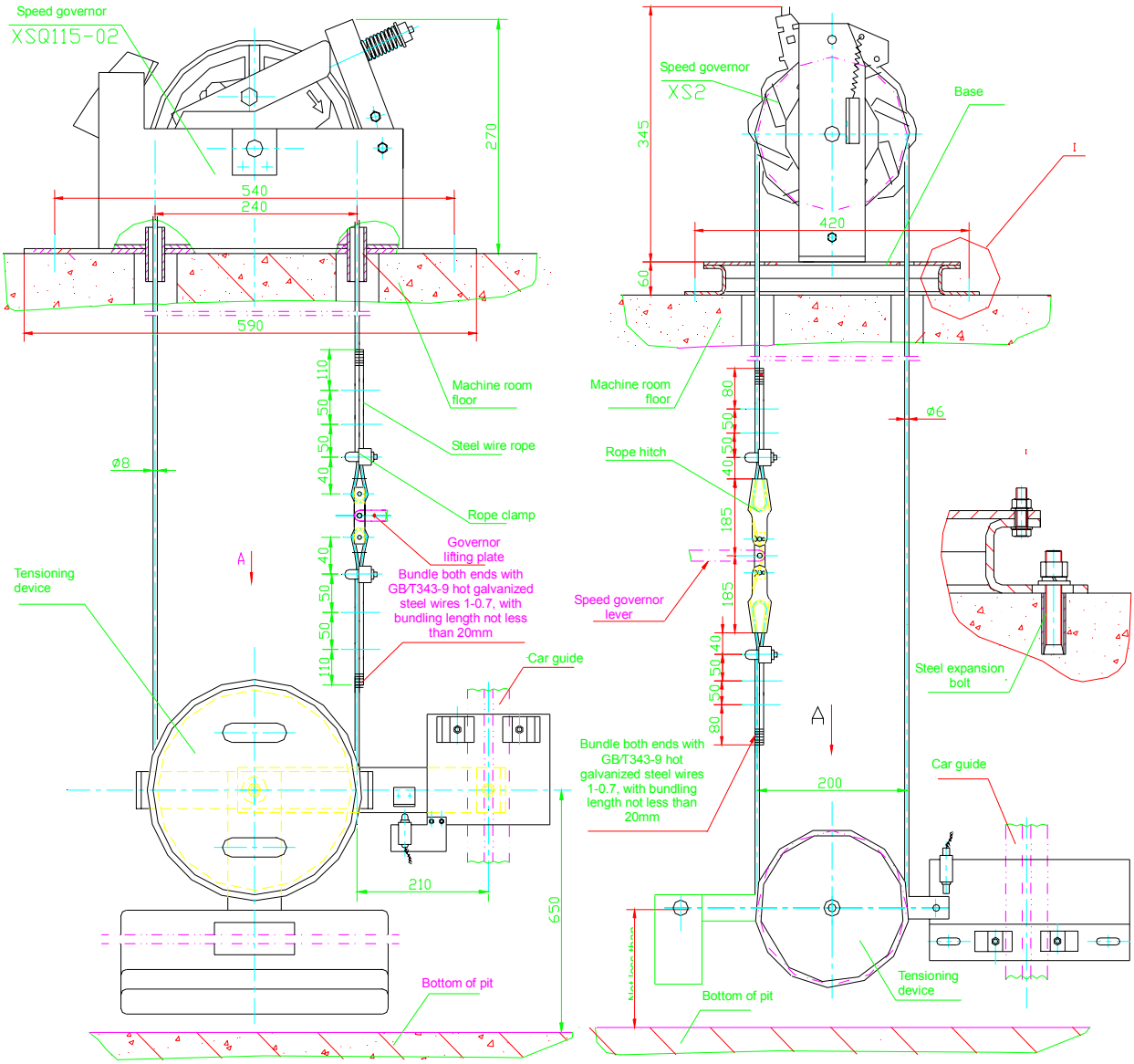

Figure 37

2.16.2 Installation of speed governor of elevator without machine room

2.16.2.1 Place the speed governor base onto the car guide according to the hoistway layout drawing and Fig.40. Install the speed governor on the base. Make sure the top of the speed governor is at least 300mm away from the top of the hoistway. Make sure that the arrow on the speed governor points at the downward direction of the car. Use adjustment spacers to adjust its levelness.

2.16.2.2 Install the tensioning device of the speed governor on the car guide rails in the pit. Make sure the lowest point of the device matches the drawing.

2.16.2.3 Set a plumb line from the speed governor race. Run one end through the template to the rope hitch center in the speed governor lever on the safety gear of the car frame and the other end to the rope race of the sheave of the tensioning device in the pit. Check if they are on the same plumb line. If not, adjust the speed governor or the tensioning device. After proper adjustment, fasten the speed governor and the tensioning device.

2.16.2.3 Install the steel wire ropes according to Fig.38.

2.16.2.4 Technical requirements on speed governor installation are the same as those of 2.16.1.5

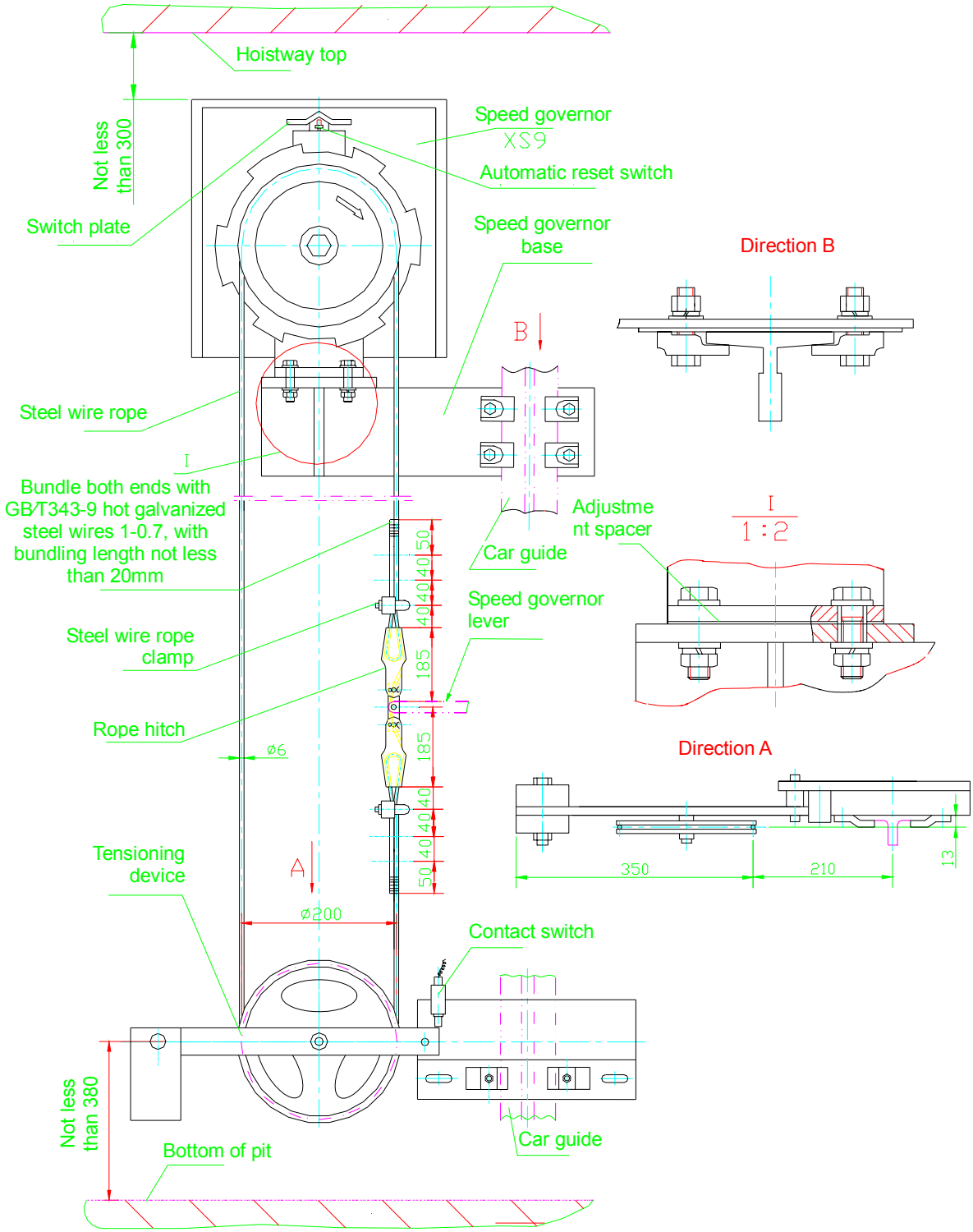

Figure 38

2.17 Installation of infrared multi-beam screen

This device will be assembled if the user chooses this option. Follow the instructions on this device during assembly. If the assembly of this device is required, the working surfaces of the screen shall not be level to the car door edges. During installation, make

sure that its distance to the door edges is 5mm and its distance to the sill is 5mm. After properly adjusting the device, use self-tapping screws to fasten the screen, connect the configured cables, and switch on power.

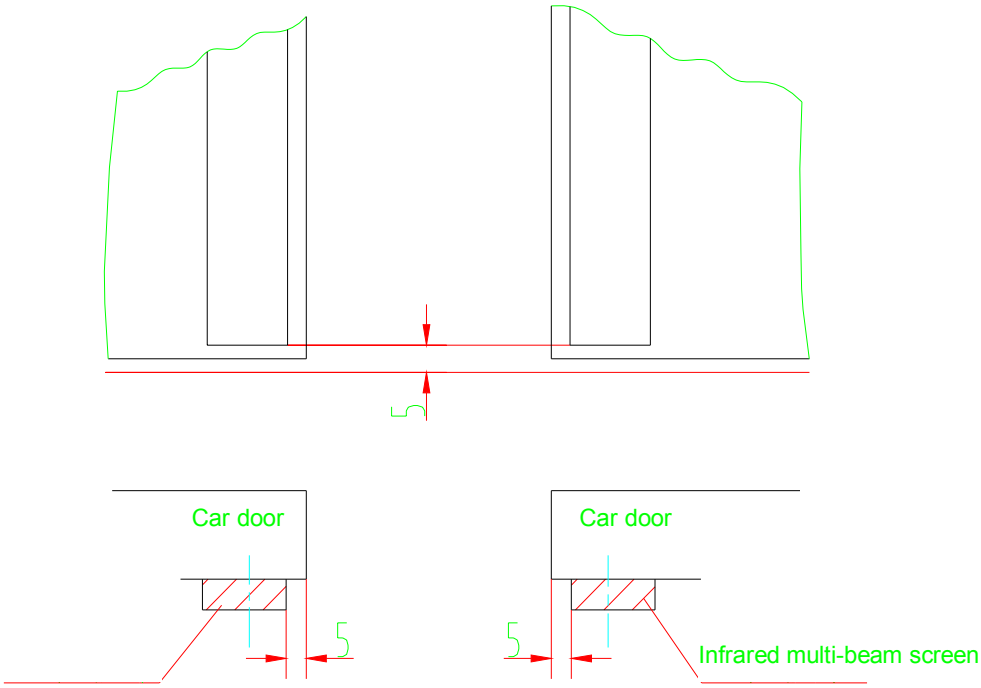

Figure 39

2.18 Installation of control cabinet

2.18.1 Installation of control cabinet of elevator with a normal machine room or with a small machine room

A special-purpose power source shall be used for the elevator. The user shall directly feed power from the power distribution room to the main power switch at the entrance of the machine room. Each main power switch shall be used only for one elevator. Any power switch shall not be shared by several elevators. When several elevators share the same machine room, the main power switches of these elevators shall be easily distinguishable. The main power switch shall be installed on the wall at a height of 1.2~1.5m above the ground.

Position the control cabinet as shown in the layout drawing. Then use M14×120 expansion bolts to fix the connecting base in the control cabinet to the floor (Fig.40).

The inclination of the control cabinet (left, right, front, rear) shall be not greater than 2mm.

Requirements: The installation position of the control cabinet shall be such that:

C. The front of the control cabinet is at least 600mm away from any door or window.

B. The control cabinet is at least 600mm away from any wall.

C. The control cabinet is at least 500mm away from any mechanical equipment.

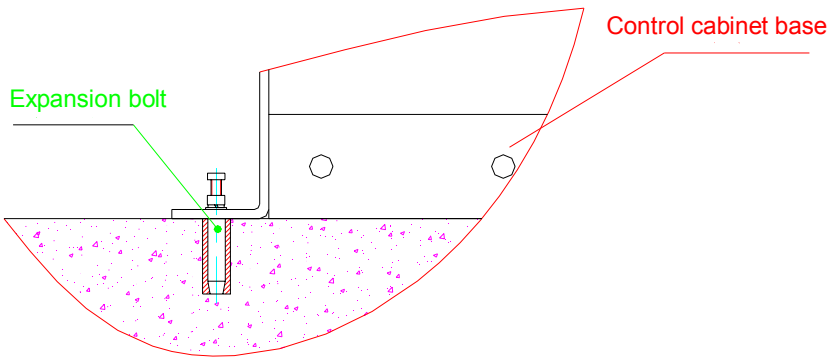

Figure 40

Cables connected with the control cabinet may enter the control cabinet through the channels in the base of the control cabinet.

2.18.2 Installation of control cabinet of elevator without machine room

A special-purpose power source shall be used for the elevator. The user shall direct feed it from the power distribution equipment to the control cabinet.

Put the control cabinet in the position shown in the layout drawing. Make sure it does not interfere with any moving part in the hoistway or the landing door system. Use M14×120 expansion bolts to fix the connecting base in the control cabinet to the floor (Fig.41). The inclination of the control cabinet (left, right, front, rear) shall be not greater than 2mm.

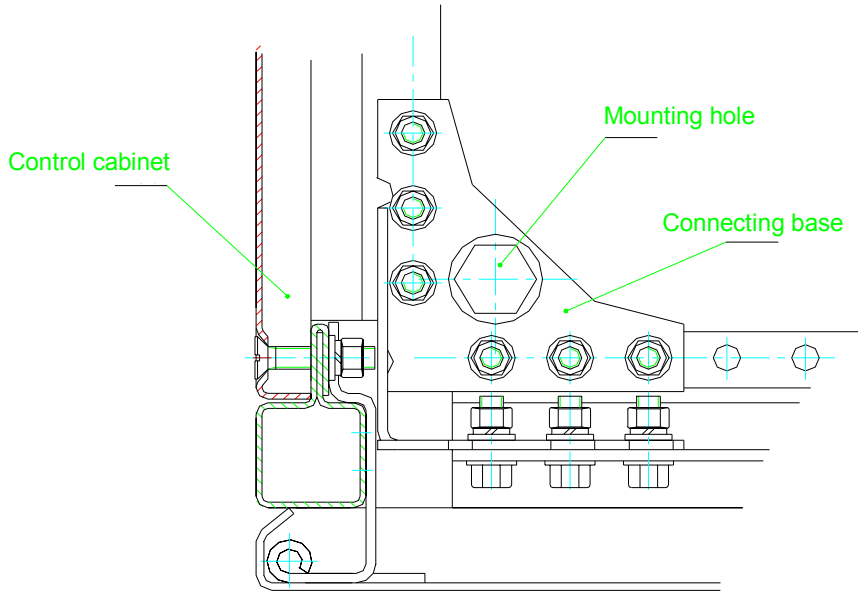

Figure 41

Cables connected with the control cabinet may enter the control cabinet through the kidney slot in the side seal of the control cabinet.

2.18.3 Installation of control cabinet of elevator without machine room

A special-purpose power source shall be used for the elevator. The user shall directly feed power from the power distribution equipment to the control cabinet.

This control cabinet has two parts. One of them is fitted to the interior wall of the hoistway on the same side as the hoisting machine in order to facilitate the wiring connection between the hoisting machine and the control cabinet. The other shares the same panel with the calling board on the top floor in order to transfer the maintenance and commissioning buttons from the control cabinet to the calling board and thus facilitate commissioning and maintenance. See Fig.42 for details.

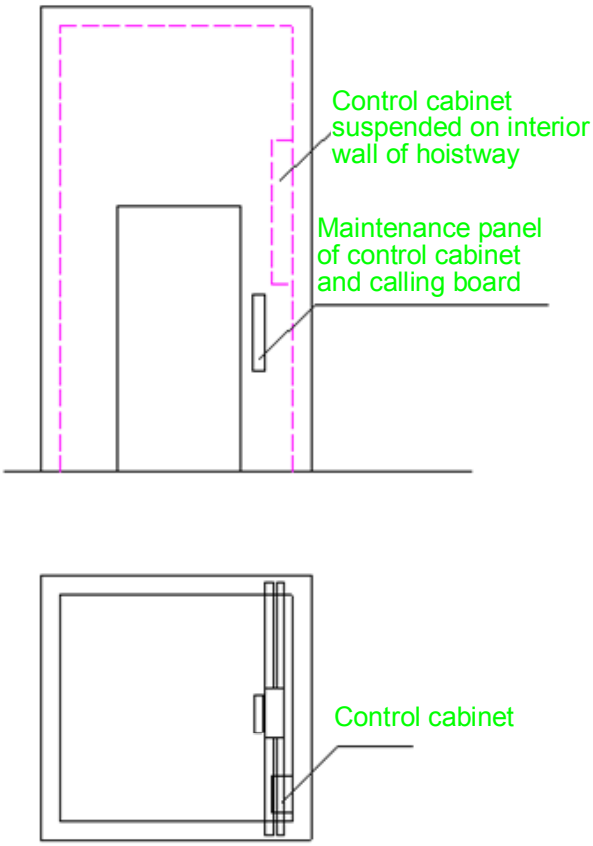

Figure 42

2.19 Installation of cable system

The cable system mainly comprises: flat-shaped hoistway trailing cables, round-shaped prefabricated hoistway cables, and other branch cables.

2.19.1 Installation of trailing cables

When any trailing cable runs from the control cabinet into the hoistway, one of its ends shall be fixed to the hoistway cable trough and the end that enters the car shall be fixed to the car bottom cable trough. Then the cable shall run along the exterior wall of the car to the car top and enter the junction box on the top of the car.

Trailing cables shall not interfere with other parts in the hoistway or have any rippled bend. Both ends of the cables shall be reliably fixed. After the car compresses the buffer, the cables shall not contact the frame of the car bottom. The lowest point of the cable bend shall be higher than the ground of the pit by 300mm. The bending diameter shall be not less than 500mm.

When the hoistway lifting height H≥40m, a hoistway cable trough shall be added at the height of H/2＋1.5. See Fig.43.

2.19.2 Installation of prefabricated cables

When a prefabricated cable runs from the control cabinet into the hoistway, one of its ends shall be fixed to the hoistway cable trough. Then the cable shall be set out in the direction of the calling board along the hoistway to the pit and then fitted with prefabricated cable fixing plates to the hoistway. And the branch cables of the prefabricated cable shall be fixed with cable fixing plates.

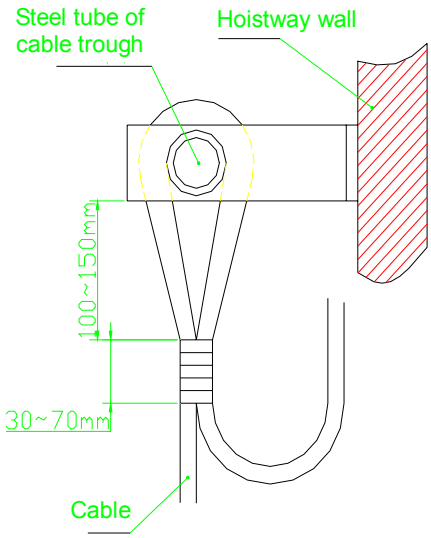

Figure 43

2.19.3 Installation of branch cables

Branch cables shall be evenly bundled. For all round cables including prefabricated ones, the bending radius shall be at least 5 times of the cable radius.

2.20 Installation of signal system

The signal system mainly involves:

1. Installation of terminal landing switches, travel limit switches, and final limit cams
2. Installation of magnetic screens and magnetic switches
   (1) When dry reed switches are used
   (2) When bistable switches are used

2.20.1 Installation of terminal landing switches, travel limit switches, and final limit cams

All these three types of switches are also fixed with brackets to the guide rails. The final limit cams are fixed with brackets to the car frame. The centers of the rollers of each switch shall be on the same straight line. When the cam presses the switch, the switch shall be actuated and maintain a certain travel allowance, as shown in Fig.44.

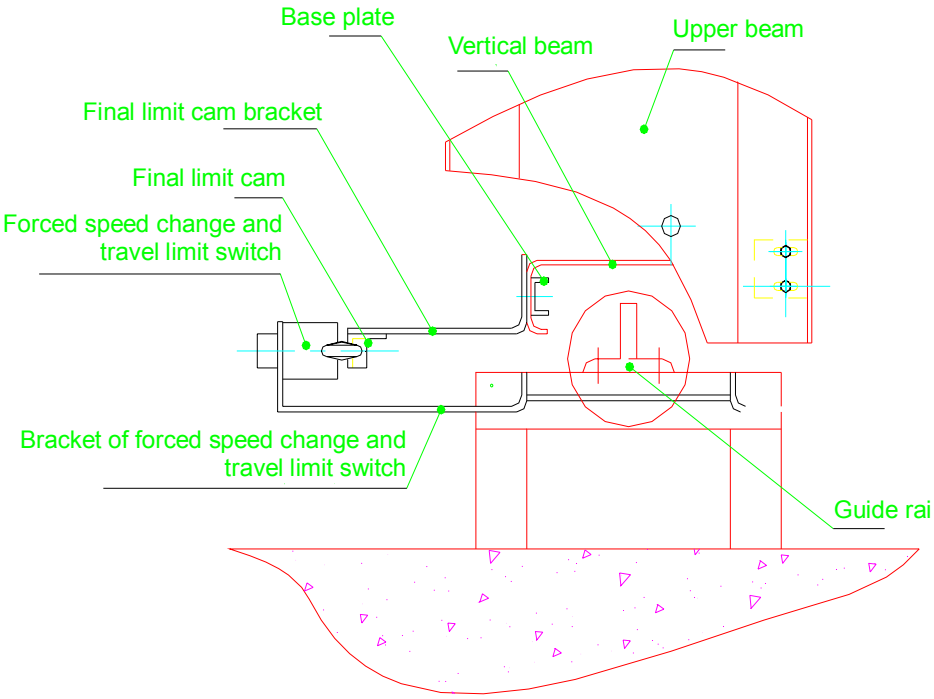

Figure 44

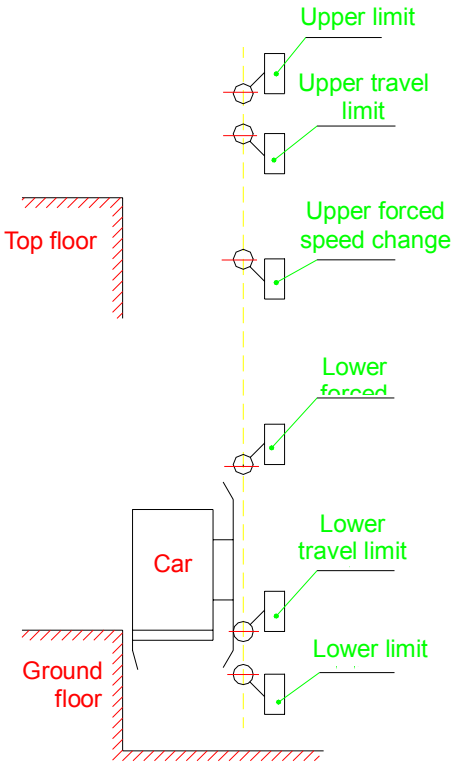

Figure 45

The table below shows the traveling distances of the switch on the cam after it is

actuated:

breaker; on-off		Upper forced speed change Lower forced speed change				
Distance mm	0.5m/s	400~500	Lower travel limit	- (50~100）	Lower limit	- (100~200）
	1.0m/s	1300~1400				
	1.6m/s	2000~2200	Upper travel limit	+ (50~100)	Upper limit	+ (100~200)
	1.75m/s	2200~2400				

2.20.2.1 Installation of magnetic screens and magnetic switches

1. When dry reed switches are used

Each magnetic switch is fitted with a bracket to the car frame. The number of magnetic switches depends on the design of the electrical system. The magnetic screen must run through the center of the magnetic switch with a central offset B of ±1mm. To prevent signals from being lost, the distance A from the end of the magnetic screen to the bottom of the magnetic switch shall be 8~10mm, as shown in Fig.46.

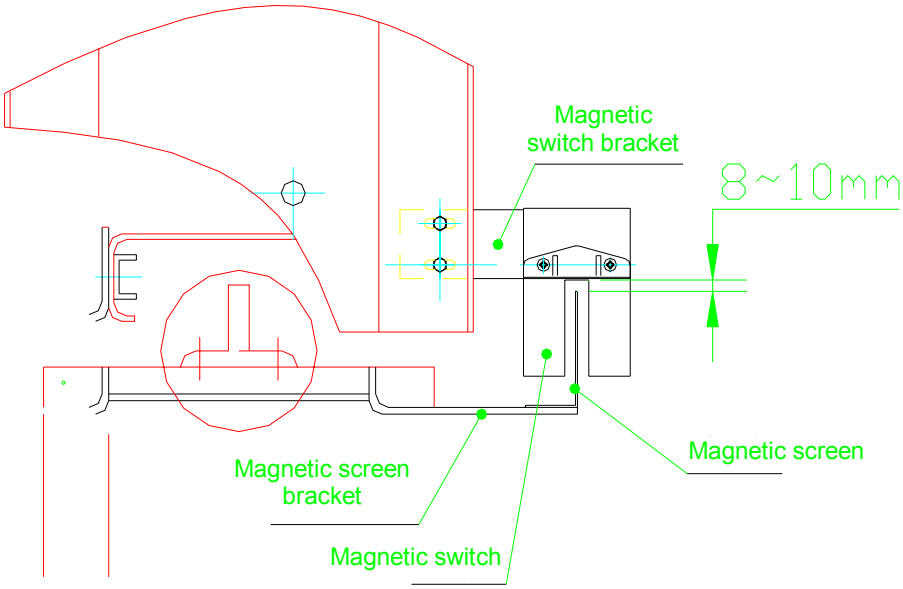

Figure 46

2. When bistable switches are used

Each magnetic switch is fitted with a bracket to the guide shoe of the car frame. The number of magnetic switches depends on the design of the electrical system. The magnetic bead (ultra-strong magnetic bead) is attached to the guide rail. During operation, the magnetic switch must run straight through the center of the magnetic bead with a central offset B of ±1mm. To prevent signals from being lost, the distance A from the end of the magnetic switch to the surface of the magnetic bead shall be 8~10mm, as shown in Fig.47.

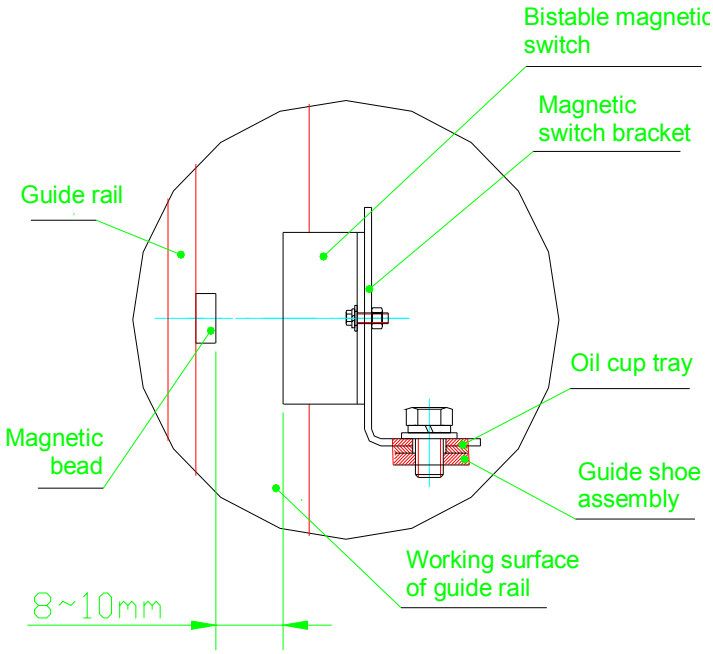

Figure 47

Installation and connection of rotary encoder:

The rotary encoder is an important device for detecting speed feedback in the elevator control system. The quality of its installation has a direct influence on the system performance. Below are the matters to be noted during on-site installation:

1. If a counter-shaft rotary encoder is used, it must be installed at the tail end of the hoisting machine and connected with a soft coupling. The concentricity of the hoisting machine shaft and the encoder shaft shall be ensured; otherwise the output pulses of the encoder will be unstable and may affect the stableness of elevator operation and even damage the coupling. The jackscrews on the coupling shall be securely butted against the terraces on both shafts to prevent slippage and runout. A loose coupling will cause unstable system feedback, vibration and leveling failure of the elevator, and even top or

bottom crashing accidents.

2. If no connecting joint is provided at the tail end of the hoist machine, a sleeve-type (hollow shaft) encoder may be used and installed on the motor shaft. Knocking is strictly forbidden during installation in order to prevent the glass CD in the encoder from being broken. After installation, the encoder shall not have any obvious shake when the motor is rotating.

3. The wire joints between the control cabinet and the encoder must be soldered. Casual splicing is forbidden. Cables of the encoder must be wired in one-to-one correspondence to the control cabinet; otherwise the encoder may be damaged. The shielded wires connecting the control cabinet and the encoder shall run through a metal hose. It is forbidden to put the metal hose and the power cord in the same trunking, lest interference is caused to the encoder signals. The shielding layers of some outgoing lines of the encoder are connected to the housing. During connection, they shall be disconnected in order to prevent interference.

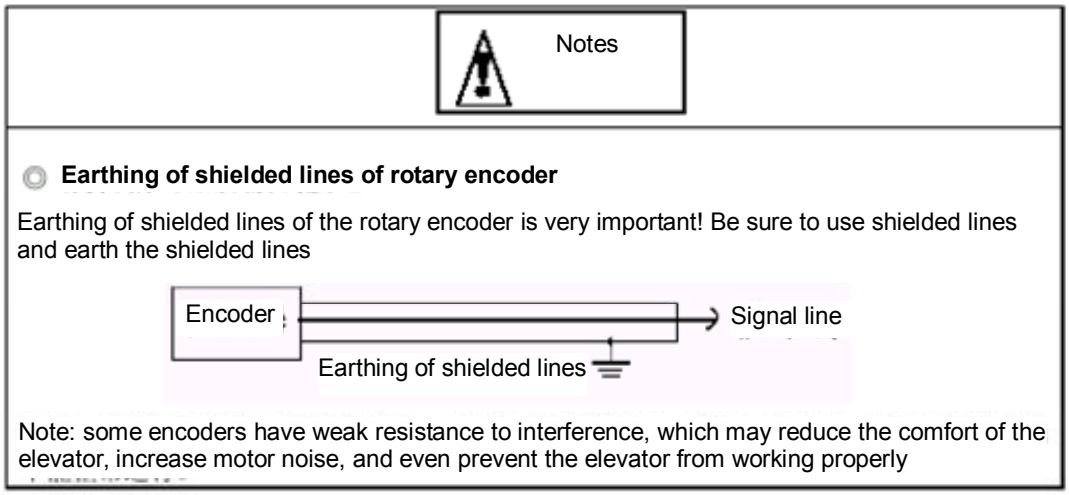

Earthing of shielded lines of rotary encoder:

1. If the encoder housing has been earthed but the shielded lines of the encoder are connected to the housing, the other end of the shielded lines of the encoder (connected to the frequency converter) does not have to be earthed.

2. If the encoder housing has been earthed but the shielded lines of the encoder are not connected to the housing, the other end of the shielded lines of the encoder (connected to the frequency converter) must be earthed.

3. To inhibit the induced interference between lines, the output power line of the frequency converter and the lines of the encoder shall be separately led into already

earthed metal tubes. And the power lines and signals shall be at least 30cm from each other.

2.21 Wiring and earthing

2.21.1 Wiring

For wiring details, refer to the electrical schematic diagram and electrical wiring diagram.

General requirements:

1. The power cables and control circuits of the elevator shall be laid separately.
2. Starting from the main power switch box, the zero line shall always be separated from the earth line.
3. A yellow-green insulated wire shall be used for the earth line. Earthing terminals of the enclosures of all electrical devices, except those with safe voltages below 36V, shall be properly earthed.
4. All earth wires shall be directly and separately connected to earthing posts and shall not be connected with each other before being earthed.
5. All connections must be marked with line numbers.
6. Wires of terminals must be reliably punched. Multi-core wires must be crimp-connected after being tinned.
7. Cables shall be sufficiently horizontal and vertical. The wiring layout shall be trim and good-looking.

I. Wiring of control cabinet and machine room

Conductors connecting motors shall be as short as possible and ≤5m. Excessively long conductors will cause loss of output power of the system.

The power line and signal line of the power source shall be strictly separated and never be placed in the same trunking; otherwise the system operation will be unstable.

Terminal N shall be directly connected to the zero line of the power network and shall not go through any cut-off switch, because the components in the control cabinet may be damaged if the zero line is broken.

2.21.2 Earthing

General requirements:

1. Earth lines that enter the machine room must be connected to the copper earthing block of the control cabinet.

2. For earth wires of machine room equipment such as the 5-line power input, the

motor housing, control cabinet housing, and encoder housing must be reliably earthed. The earthing point is the copper earthing block of the control cabinet.

3. Devices inside the control cabinet, such as the frequency converter, switching power supply, and transformer, must be reliably earthed. The earthing point is the copper earthing block of the control cabinet.

4. For car-top devices, such as the door operator, the overall car top must be reliably earthed. The earthing point is the copper earthing block of the control cabinet.

The earthing quality will have a direct influence on the operation of the entire system. Earth wires shall meet the following requirements:

1. The earthing resistance shall be less than 10Ω. The cross-sectional area of the earth wire shall be larger than $2mm^2$.

2. Single-point earthing is adopted. The earth wire shall be as short as possible. (Single-point earthing is shown in the diagram below)

3. Earthing points of control cabinet and motors shall not be series-connected. The electric welding machine or high-current equipment shall not share earthing points with the system.

Correct earthing practice:

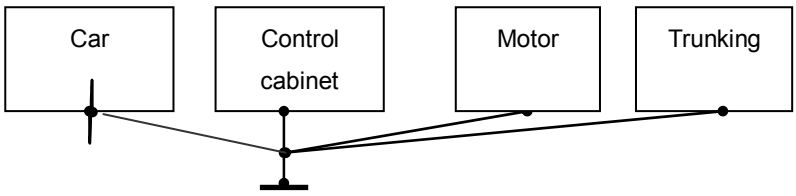

Figure 48

Notes

- Earthing of hoistway cables and trailing cables

For hoistway cables and trailing cables, the HV wires (including those for door operator power, safety circuits, door lock circuits, lighting circuits, etc.) must be separated from LV wires (including communication lines, DC OV, DC 24V, leveling dry reed switches, terminal landing forced deceleration switches, terminal landing travel limit switches, etc.). Twisted-pair cables must be used for communication lines with twist pitch of 20-30mm. STP cables shall be used conditionally and their shielding layers shall be earthed.

Notes: if HV lines are paralleled with LV lines – this is commonly seen in trailing cables – the HV lines must be placed on one side and LV lines on the other. HV lines must be separated from LV lines with earth wires

Notes: wiring observations mentioned above must be specified in the design drawings. The specific intended purpose of each line number must be clearly stated

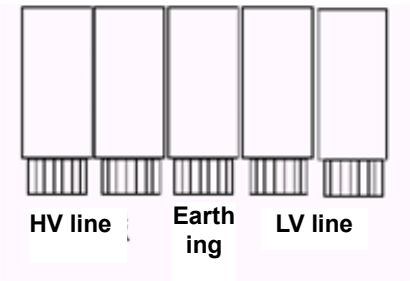

Figure 49